# LISTINO PREZZI - PRICE LIST

01 2026

40th ANNIVERSARY
SINCE 1968

CRG

Gentili Clienti,
Vi preghiamo di prendere visione degli aggiornamenti a seguire, tali aggiornamenti nel listino sono evidenziati in **grassetto** per una migliore consultazione.

LA CRG SI RISERVA DI MODIFICARE LE CARATTERISTICHE TECNICHE ED I PREZZI IN QUALSIASI MOMENTO E SENZA PREAVVISO. LA CRG NON SI RITIENE RESPONSABILE DI EVENTUALI DIFFERENZE FRA LE INFORMAZIONI CONTENUTE NEL CATALOGO ED I PRODOTTI ATTUALI.

Dear Customers,
please have a look at the updates as follow, such updates are in **bold** on the price list for an easier consultation.

CRG RESERVES THE RIGHT TO MODIFY THE TECHNICAL CHARACTERISTICS AND PRICING UPON DISCRETION. CRG WILL NOT BE HELD RESPONSIBLE FOR EVENTUAL VARIATIONS REGARDING THE CONTENTS OF THE CURRENT PRICE CATALOGUE AND ACTUAL PRODUCTS.

ABBIGLIAMENTO & ACCESSORI ..... PAG. 108
ACCESSORI TANICA ..... PAG. 38
ARTICOLI B&S ..... PAG. 104
ARTICOLI PUFFO ..... PAG. 100
ARTICOLI XL ..... PAG. 103
ASSALI ..... PAG. 39
BARRETTE STERZO ..... PAG. 60
CARENE POSTERIORI KG ..... PAG. 32
CARROZZERIE ..... PAG. 24
CERCHI ..... PAG. 67
CORONE & CATENE ..... PAG. 90
FILTRI ..... PAG. 89
FLANGE ..... PAG. 40
FUSELLI ..... PAG. 61
GUIDA ALL'USO DEL LOGO ..... PAG. 122
IMPIANTI FRENANTI ..... PAG. 42
KIT ADESIVI ..... PAG. 34
KIT PARACATENA ..... PAG. 92
KIT PRONTO GARA ..... PAG. 93
KIT RIPARA DISCO ..... PAG. 91
LEVE & COMANDI ..... PAG. 77
MOZZI ..... PAG. 68
PEDALI ..... PAG. 78
PIANALI ..... PAG. 80
PIASTRE MOTORE ..... PAG. 83
PINZE ..... PAG. 52
POMPA FRENI ..... PAG. 56
RADIATORI ..... PAG. 87
RICAMBI B&S ..... PAG. 106
RICAMBI PISTA E MANUTEZIONE ..... PAG. 98
RIPARTITORE DI FRENATA ..... PAG. 58
SCOCCHE ..... PAG. 16
SEDILI ..... PAG. 82
SISTEMI DI TELEMETRIA STARLANE ..... PAG. 96
STABILIZZATORI ..... PAG. 21
SUPPORTI ..... PAG. 84
TELAI ..... PAG. 6
TIRANTI FRENO ..... PAG. 59
VARIE RAFFREDDAMENTO ..... PAG. 88
VOLANTI & PIANTONI ..... PAG. 74

## COLORI IMPIANTI

| | | | | | |
|---|---|---|---|---|---|
| M | MINI | DD | V11 | DD | V13 |
| FS4 | FS4 | KZ | V11 | KZ | V13 |

BODYWORK ..... PAG. 24
BRAKE EQUALIZER ..... PAG. 58
BRAKE RODS ..... PAG. 59
BRAKE SYSTEMS ..... PAG. 42
B&S ITEMS ..... PAG. 104
B&S SPARE PARTS ..... PAG. 106
CALIPER ..... PAG. 52
CHAIN & SPROCKETS ..... PAG. 90
CHAIN PROTECTION KIT ..... PAG. 92
CHASSIS ..... PAG. 6
CLOTHING LINE & ACCESSORIES ..... PAG. 108
CONTROL & LEVERS ..... PAG. 77
DISC PROTECTION KIT ..... PAG. 91
ENGINE MOUNT ..... PAG. 83
FILTERS ..... PAG. 89
FLANGES ..... PAG. 40
FLOOR TRAY ..... PAG. 80
FRAMES ..... PAG. 16
FUEL TANK ACCESSORIES ..... PAG. 38
GUIDE LINE ..... PAG. 122
HUBS ..... PAG. 68
MASTER CYLINDER ..... PAG. 56
PEDALS ..... PAG. 78
PUFFO ITEMS ..... PAG. 100
RADIATOR ..... PAG. 87
READY TO RACE KIT ..... PAG. 93
REAR AXLES ..... PAG. 39
REAR BUMPER KG ..... PAG. 32
RIMS ..... PAG. 67
SEATS ..... PAG. 82
STARLANE TELEMETRY SYSTEM ..... PAG. 96
STEERING WHEELS & COLUMNS ..... PAG. 74
STICKERS KIT ..... PAG. 34
STUB AXLES ..... PAG. 61
SUPPORTS ..... PAG. 83
TORSION BAR ..... PAG. 21
TOOLS & TRACK MAINTENANCE ..... PAG. 98
TRACK RODS ..... PAG. 60
VARIOUS COOLING SYSTEM ITEMS ..... PAG. 88
XL ITEMS ..... PAG. 103

## BRAKE SYSTEM COLORS

| | | | | | |
|---|---|---|---|---|---|
| M | MINI | DD | V11 | DD | V13 |
| FS4 | FS4 | KZ | V11 | KZ | V13 |

| ROAD REBEL | CATEGORIA CATEGORY | FRENO BRAKE | CODICE CODE |
|---|---|---|---|
| | KZ | Ven. 11/192 | CRG.20082 |
| | | Ven. 13/192 | CRG.20106 |
| | | Ven. 13/180 | CRG.20121 |

Il telaio Road Rebel adotta una scocca con tubi di acciaio cromo molibdeno con Ø32mm con nuovi scatolati portacuscinetti. Sui telai Road Rebel è possibile regolare l'altezza da terra dell'assale posteriore, del passo e dei fuselli anteriori, inoltre sull'anteriore, è possibile registrare camber e caster molto facilmente grazie all'esclusivo sistema Sniper.
Su tutta la gamma racing viene montato il sistema frenante Ven 11 o Ven 13 a seconda dell'impianto frenante scelto per disco freno 192 o 180. Il telaio viene fornito completo di carenature 507/509 oltre al nuovo kit adesivi.

The Road Rebel chassis has a frame with Ø32 Chrome moli tubes, with the new bearing hanger. On this chassis it is possible to adjust the rear axle, the wheelbase and the stub axle settings; on the front side it is easy to set up the caster camber by the exclusive Sniper caster system. All the racing range is supplied with the Ven 11 or Ven13 brake system depending on the braking system chosen, for 192 or 180 disc brake. The chassis is supplied with 507/509 plastic bodywork and new sticker kit.

| | FRENO<br>BRAKE | CATEGORIA<br>CATEGORY | CODICE<br>CODE |
|---|---|---|---|
| KT2 | Ven. 11/192 | OK IAME | CRG.20099 |
| | | ROTAX | |
| | | X30 | |
| | | KZ | CRG.20137 |
| | Ven. 13/192 | OK IAME | CRG.20107 |
| | | ROTAX | |
| | | X30 | |
| | | KZ | CRG.20138 |

Il telaio KT2 adotta una scocca con tubi d'acciaio cromo molibdeno di Ø30mm con i nuovi scatolati portacuscinetti e rinforzo sul lato freno. Sui telai KT2 è possibile regolare sia l'altezza da terra dell'assale posteriore GLM che quella dei fuselli anteriori. Inoltre sull'anteriore, è possibile registrare camber e caster molto facilmente grazie all'esclusivo sistema Sniper. Su tutta la gamma racing viene montato il sistema frenante Ven11 o Ven13 a seconda dell'impianto frenante scelto e disco freno 192. Il telaio viene fornito completo di carenature 507/509 oltre al nuovo kit adesivi.

The KT2 chassis has a frame with Ø30 Chrome molibdeno tubes, with the new bearing hanger reinforced on the brake side. On this chassis it is possible to adjust the rear axle GLM and the stub axle settings; on the front side it is easy to set up the caster camber by the exclusive Sniper caster system. All the chassis range is supplied with the Ven11 or Ven13 brake system depending on the braking system chosen and 192 disc brake. The chassis is supplied with 507/509 plastic bodywork and new sticker kit.

| KT2/R | FRENO<br>BRAKE | CATEGORIA<br>CATEGORY | CODICE<br>CODE |
|---|---|---|---|
| | Ven 11/192 | OK | CRG.20151 |
| | | KZ | CRG.20152 |

Il telaio KT2/R adotta una scocca con tubi di acciaio cromo molibdeno con Ø30mm con nuovi scatolati portacuscinetti.
Sui telai KT2/R è possibile regolare l'altezza da terra dell'assale posteriore, del passo e dei fuselli anteriori, inoltre sull'anteriore, è possibile registrare camber e caster molto facilmente grazie all'esclusivo sistema Sniper.
Su tutta la gamma racing viene montato il sistema frenante Ven 11 e disco freno 192. Il telaio viene fornito completo di carenature 507/509 oltre al nuovo kit adesivi.

The KT2/R chassis has a frame with Ø30 Chrome moli tubes, with the new bearing hanger. On this chassis it is possible to adjust the rear axle, the wheelbase and the stub axle settings; on the front side it is easy to set up the caster camber by the exclusive Sniper caster system. All the racing range is supplied with the Ven 11 and 192 disc brake. The chassis is supplied with 507/509 plastic bodywork and new sticker kit.

| | FRENO<br>BRAKE | CATEGORIA<br>CATEGORY | CODICE<br>CODE |
|---|---|---|---|
| KT2/4 | Ven 11/192 | KZ | CRG.20100 |
| | | OK IAME | CRG.20101 |
| | | X30 | |
| | | ROTAX | |
| | Ven 13/192 | KZ | CRG.20108 |
| | | OK IAME | CRG.20109 |
| | | ROTAX | |
| | | X30 | |

Il telaio KT2/4 adotta una scocca con tubi d'acciaio cromo molibdeno di Ø30mm per quanto riguarda i longheroni e le traverse, con i nuovi scatolati portacuscinetti con rinforzo sul lato freno. Sui telai KT2/4 è possibile regolare sia l'altezza da terra dell'assale posteriore che quella dei fuselli anteriori; inoltre sull'anteriore è possibile registrare camber e caster molto facilmente grazie all'esclusivo sistema Sniper. Su tutta la gamma racing viene montato il sistema frenante Ven11 o Ven13 a seconda dell'impianto frenante scelto, per disco freno 192. Il telaio viene fornito completo di carenature 507/509 oltre al nuovo kit adesivi.

The KT2/4 chassis has a frame with Ø30 Chrome moli tubes, on the long rail and the cross bar with the new bearing hanger reinforced on the brake side. On this chassis it is possible to adjust the rear axle and the stub axle settings; on the front side it is easy to set up the caster camber by the exclusive Sniper caster system. All the racing range is supplied with the Ven11 or Ven13 brake system with 192mm brake disc. The chassis is supplied with 507/509 plastic bodywork and new sticker kit.

| | FRENO<br>BRAKE | CATEGORIA<br>CATEGORY | CODICE<br>CODE |
|---|---|---|---|
| KT4 | Ven. 11/192 | X30 | CRG.20084 |
| | | OK IAME | |
| | | ROTAX | |
| | Ven. 13/192 | KZ | CRG.20110 |
| | | OK IAME | CRG.20111 |
| | | ROTAX | |
| | | X30 | |
| | Ven. 13/180 | KZ | CRG.20126 |

Il telaio KT4 adotta una scocca con tubi d'acciaio cromo molibdeno con Ø30mm per quanto riguarda i longheroni, mentre per le traverse e avantreno queste sono di Ø32mm. Nuovi gli scatolati portacuscinetti con rinforzo sul lato freno. Sui telai KT4 è possibile regolare sia l'altezza da terra dell'assale posteriore che quella dei fuselli anteriori, inoltre sull'anteriore è possibile registrare camber e caster molto facilmente grazie all'esclusivo sistema Sniper. Su tutta la gamma racing viene montato il sistema frenante Ven11 o Ven13 a seconda dell'impianto frenante scelto, sono disponibili due opzioni per il disco freno, 192 o 180. Il telaio viene fornito completo di carenature 507/509 oltre al nuovo kit adesivi.

The KT4 chassis has a frame with Ø30 Chrome moli tubes on the long chassis rail and the cross bars and front loop Ø32 tubes, the new bearing hanger reinforced on the brake side. On the KT4 chassis it is possible to adjust the rear axle and the stub axle settings; on the front side it is easy to set up the caster camber by the exclusive Sniper caster system. All the chassis range is supplied with the Ven11 or Ven13 brake system depending on the braking system chosen, two options are available for 192 or 180 brake disc. The chassis is supplied with 507/509 plastic bodywork and new sticker kit.

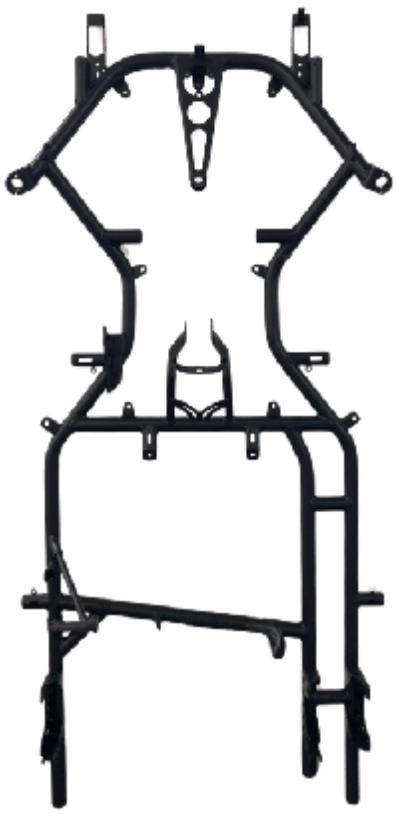

| | FRENO<br>BRAKE | CATEGORIA<br>CATEGORY | CODICE<br>CODE |
|---|---|---|---|
| KT5 | Ven. 13/192 | OK IAME | CRG.20104 |
| | | X30 | |
| | | ROTAX | |
| | Ven. 11/192 | X30 | CRG.20119 |
| | | ROTAX | |
| | Ven. 13/180 | OK IAME | CRG.20116 |
| KT5/4 | Ven. 13/192 | KZ | CRG.20115 |
| | Ven. 11/192 | | CRG.20134 |

Il telaio KT5 adotta una scocca con tubi d'acciaio cromo molibdeno con Ø30mm per quanto riguarda i longheroni, mentre l'avantreno è di Ø32mm. Nuovi gli scatolati portacuscinetti con rinforzo sul lato freno. Sui telai KT5 è possibile regolare sia l'altezza da terra dell'assale posteriore che quella dei fuselli anteriori, inoltre sull'anteriore è possibile registrare camber e caster molto facilmente grazie all'esclusivo sistema Sniper. Su tutta la gamma Racing viene montato il sistema frenante Ven11 o Ven13, con disco freno 192 o 180. Il telaio viene fornito completo di carenature 507/509 oltre al nuovo kit adesivi.

The KT5 chassis has a frame with Ø30 Chrome molibdeno tubes on the long chassis rail and the front loop Ø32 tubes, the new bearing hanger reinforced on the brake side. On the KT5 chassis it is possible to adjust the rear axle and the stub axle settings; on the front side it is easy to set up the caster camber by the exclusive Sniper caster system. All the racing range is supplied with the Ven11 or Ven13 brake system with 192 or 180mm brake disc. The chassis is supplied with 507/509 plastic bodywork and new sticker kit.

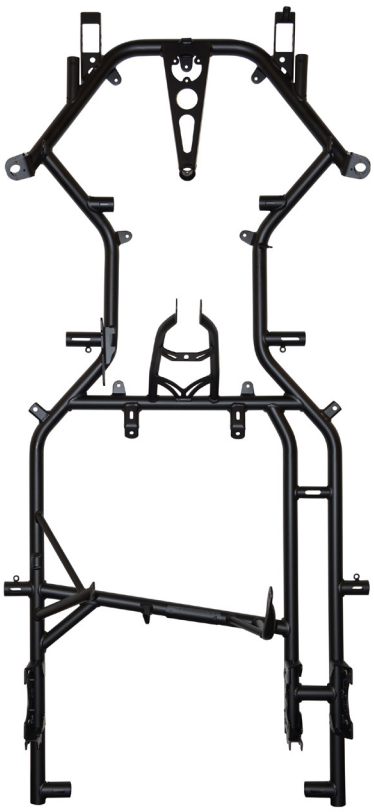

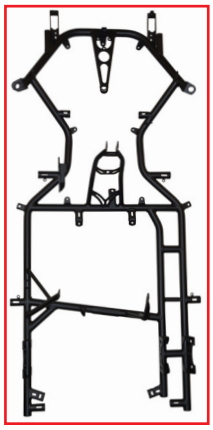

| | FRENO<br>BRAKE | Ø TUBI<br>Ø TUBES | CODICE<br>CODE |
|---|---|---|---|
| DD2 | Ven. 11/192 | 30-30 | CRG.20532 |
| | | 30-32 | CRG.20529 |
| | | 32-32 | CRG.20533 |
| | Ven. 13/192 | 30-30 | CRG.20538 |
| | | 30-32 | CRG.20539 |
| | | 32-32 | CRG.20540 |

La serie di telai DD2 ha il nuovo innovativo sistema di montaggio del motore che permette un passo variabile. Sono disponibili tre telai DD2, uno con tubi Ø32 cromo molibdeno, uno con tubi Ø30 cromo molibdeno e il terzo con Ø30 tubi in cromo molibdeno su longheroni e traverse Ø32. Tutte e tre le versioni DD2 hanno il nuovo supporto cuscinetto rinforzato lato freno. Su tutti e tre i kart DD2 è possibile regolare le impostazioni del fusello; sul lato anteriore è facile impostare il camber delle ruote grazie all'esclusivo sistema di ruote Sniper. Tutta la gamma racing è fornita con l'impianto frenante Ven11 o Ven13 con disco freno da 192 mm. Il telaio viene fornito completo di carenature 507/509 oltre al nuovo kit adesivi.

The series of DD2 chassis has the new innovated system for the mounting of the engine which permits a variable wheel base. There are three DD2 frame, one with Ø32 Chrome molibdeno tubes, one with Ø30 Chrome moli tubes and the third with Ø30 Chrom molibdeno tubes on the long chassis rails and cross bars Ø32. All the DD2 with the new bearing hanger reinforced on the brake side. On all three of the DD2 karts it is possible to adjust the stub axle settings; on the front side it is easy to set up the caster camber by the exclusive Sniper caster system. All the racing range is supplied with the Ven11 or Ven13 brake system with 192 mm brake disc. The chassis is supplied with 507/509 plastic bodywork and new sticker kit.

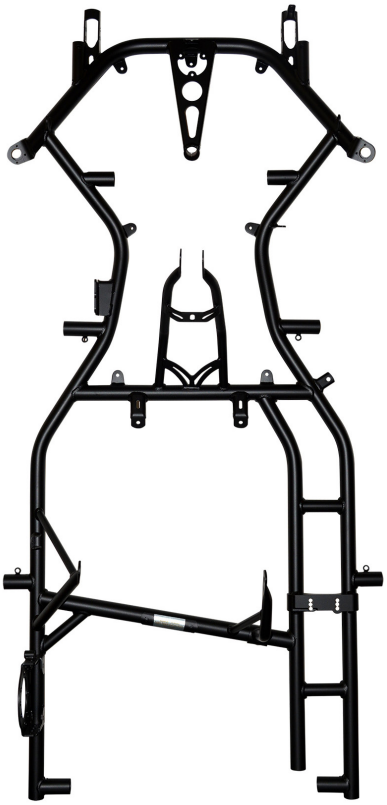

| MINI BLACK MIRROR | FRENO BRAKE | VERSIONE VERSION | CODICE CODE |
|---|---|---|---|
| | Ven. 12 | Goldline | CRG.20527.POSTKG |
| | | | CRG.20527ROTAX |

Il telaio Mini Black Mirror adotta una scocca con tubi di acciaio cromo molibdeno di Ø28mm ed il passo da 950. Sui telai della serie racing è possibile regolare sia l'altezza da terra dell'assale posteriore che quella dei fuselli anteriori, inoltre sull'anteriore è possibile registrare camber e caster molto facilmente grazie all'esclusivo sistema Sniper. Su tutta la gamma racing viene montato il sistema frenante Ven12 con disco flottante Ø162 ghisa e acciaio. Il telaio viene fornito completo di carenature MK20/27 e kit adesivi.

The mini kart Black Mirror has a frame with Ø28 Chrome moli tubes and a wheel base of 950. On this chassis it's possible to adjust the rear axle and the stub axle settings; on the front side it is easy to set up the caster camber by the exclusive Sniper caster system. The chassis is supplied with Ven12 brake system with a floating disc Ø162, cast iron and steel, MK20/27 bodywork and stickers kit.

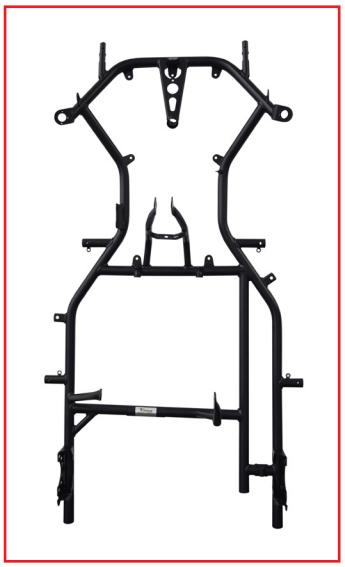

| PUFFO | CATEGORIA<br>CATEGORY | CODICE<br>CODE |
|---|---|---|
| | HONDA Gx35 | CRG.00169 |
| | COMER | CRG.00148 |

Il telaio Puffo adotta una scocca con tubi di acciaio cromo molibdeno di Ø45mm ed il passo da 880 mm. Su tutta la gamma Puffo viene montato il sistema frenante meccanico con disco fisso. Il telaio viene fornito completo di carenature MK20 e da quella posteriore Mini KG oltre ai kit adesivi, motore, pneumatici e sedile.

The kart Puffo has a frame with Ø45 Chrome moli tubes and a wheel base of 880 mm. The chassis is supplied with a mechanical brake system with a fixed disc. MK20 bodywork, rear Mini KG bumper, stickers kit, engine, tyres and seat.

Posizionamento adesivi paracapelli.
Hair protector stickers placing.

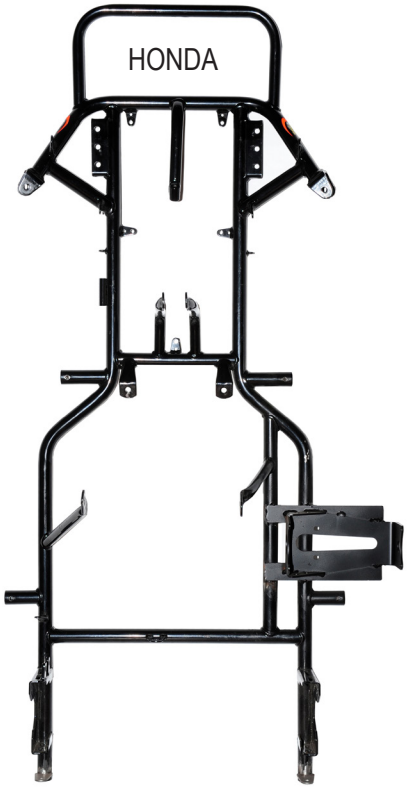


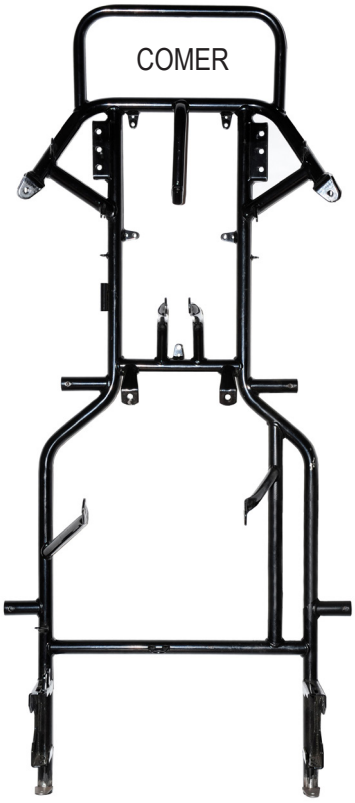

| FS4 | VERSIONE<br>VERSION | FRENO<br>BRAKE | CATEGORIA<br>CATEGORY | CODICE<br>CODE |
|---|---|---|---|---|
| | 4 STROKE | Ven | SENZA MOTORE<br>WITHOUT ENGINE | CRG.20058 |
| | | | CON MOTORE<br>WITH ENGINE | CRG.20059 |

Il telaio FS4 quattro tempi, progettato per la categoria Briggs&Stratton, adotta una scocca con tubi di acciaio cromo molibdeno con Ø28 e il passo da 1030 mm. Sui telai di questa serie è possibile regolare sia l'altezza da terra dell'assale posteriore che quella dei fuselli anteriori, inoltre sull'anteriore è possibile registrare camber e caster molto facilmente grazie all'esclusivo sistema Sniper. Su tutta la gamma racing viene montato il sistema frenante Ven 11 con disco autoventilato. Il telaio viene fornito completo di carenature 507/508 e kit adesivi e dalla carena posteriore KG.

The FS4 four stroke kart, designed for the Briggs&Stratton category has a frame with Ø28 chrome moli tubes and a wheel base of 1030 mm. On this chassis it is possible to adjust the rear axle and the stub axle settings. On the front side it is easy to set up the caster and camber with the exclusive sniper caster system. The chassis is supplied with the Ven 11 brake system, with an auto ventilated brake disc, 507/508 bodywork, KG rear bumper and stickers kit.

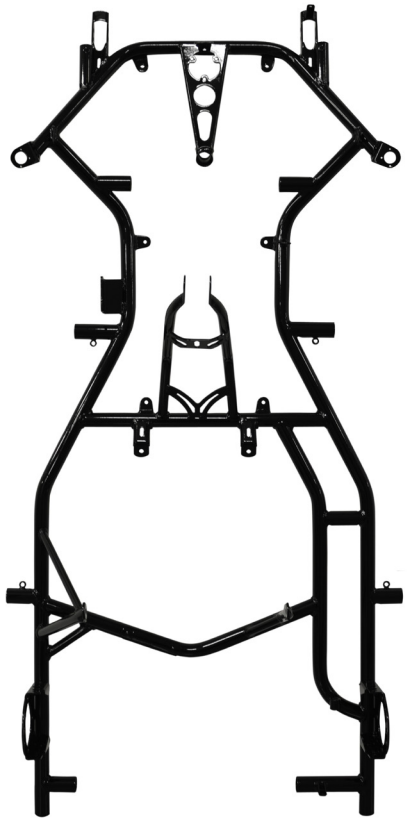

| MINI B&S | CATEGORIA<br>CATEGORY | FRENO<br>BRAKE | CODICE<br>CODE |
|---|---|---|---|
| | **4 STROKE**<br>Con motore - With engine | **Ven 12** | **CRG.20518** |

Il telaio Mini Briggs&Stratton 4 tempi, adotta una scocca con tubi di acciaio cromo molibdeno con Ø28 e il passo da 950 mm. Sui telai di questa serie è possibile regolare sia l'altezza da terra dell'assale posteriore che quella dei fuselli anteriori, inoltre sull'anteriore è possibile registrare camber e caster molto facilmente grazie all'esclusivo sistema Sniper. Su tutta la gamma racing viene montato il sistema frenante Ven 12 con disco flottante Ø162 ghisa e acciaio. Il telaio viene fornito completo di carenature MK20 e kit adesivi.

The Mini Briggs&Stratton four stroke kart, has a frame with Ø28 chrome moli tubes and a wheel base of 950 mm.
On this chassis is possible to adjust the rear axle and the stub axle settings; on the front side it is easy to set up the caster camber by the exclusive Sniper caster system. The chassis is supplied with Ven 12 brake system with a floating disc Ø162, cast iron and steel, MK20 bodywork and stickers kit.

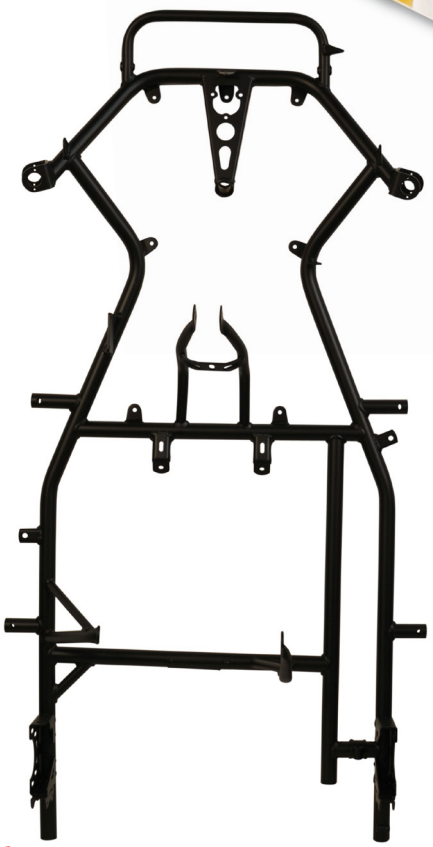

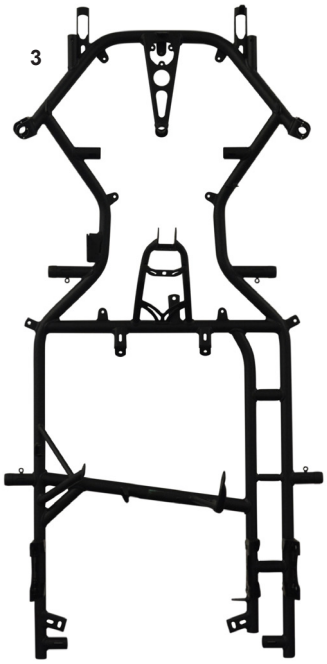

| ES | COD. | DESCRIZIONE | DESCRIPTION |
|---|---|---|---|
| **1** | FVO.04985 | Scocca Road Rebel 32/32 KZ | Road Rebel frame 32/32 KZ |
| **1** | FVO.06890 | Scocca KT2/R 30/30 KZ | KT2/R frame 30/30 KZ |
| **2** | FVO.05626 | Scocca KT2/4 30/30 KZ | KT2/4 frame 30/30 KZ |
| **3** | FVO.04986 | Scocca KT4 30/32 KZ | KT4 frame 30/32 KZ |
| **4** | FVO.06276 | Scocca KT2 30/30 KZ | KT2 30/30 frame KZ |
| **5** | FVO.04465 | Scocca KT4 30/32 KZ | KT4 KZ frame 30/32 |

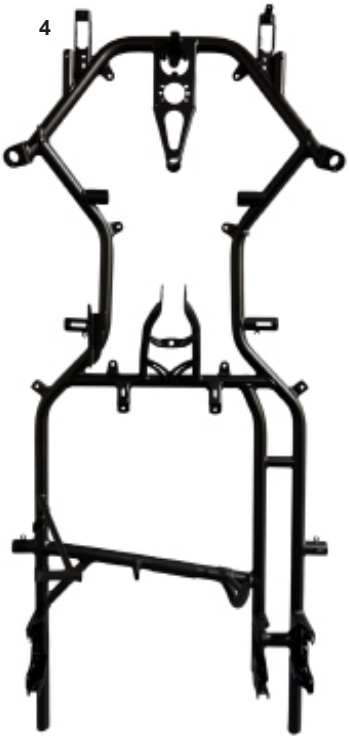


| ES | COD. | DESCRIZIONE | DESCRIPTION |
|---|---|---|---|
| | | . | |
| **1** | FVO.05625 | Scocca KT2 30/30 OK | KT2 30/30 frame OK |
| **2** | FVO.06889 | Scocca KT2/R 30/30 OK | KT2/R frame 30/30 OK |
| **2** | FVO.05627 | Scocca KT2/4 30/30 OK | KT2/4 30/30 frame OK |
| **3** | FVO.04992 | Scocca KT4 30/32 OK | KT4 30/32 frame OK |
| **4** | FVO.05775 | Scocca KT5 30/32 OK | KT5 30/32 frame OK |

1

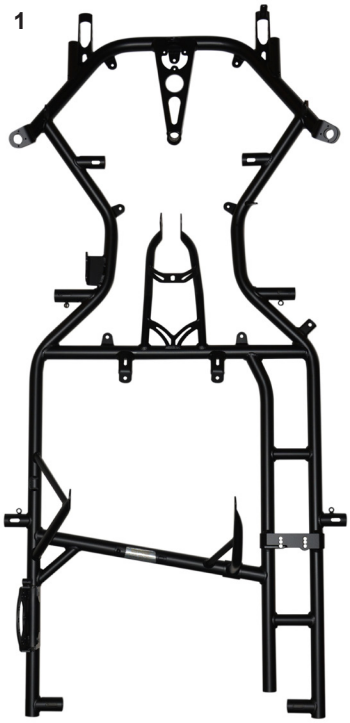

2

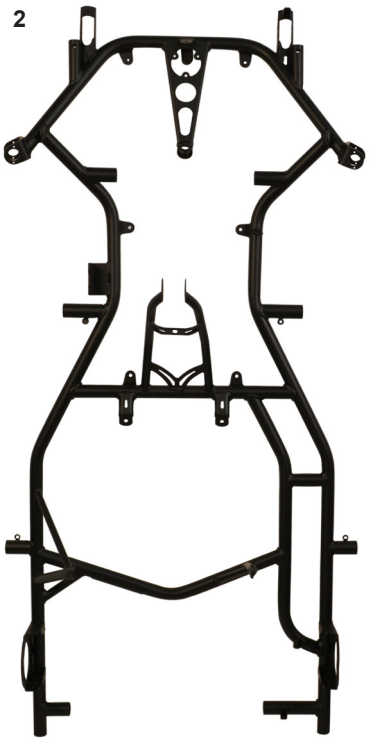

| ES | COD. | DESCRIZIONE | DESCRIPTION |
|---|---|---|---|
| **1** | FVO.05629 | Scocca DD2 CRG 30/30 | DD2 CRG frame 30/30 |
| **1** | FVO.05630 | Scocca DD2 CRG 30/32 | DD2 CRG frame 30/32 |
| **1** | FVO.05631 | Scocca DD2 CRG 32/32 | DD2 CRG frame 32/32 |
| **2** | FVO.03902 | Scocca FS4 28-4-Cycle | FS4 28 4-Cycle frame |

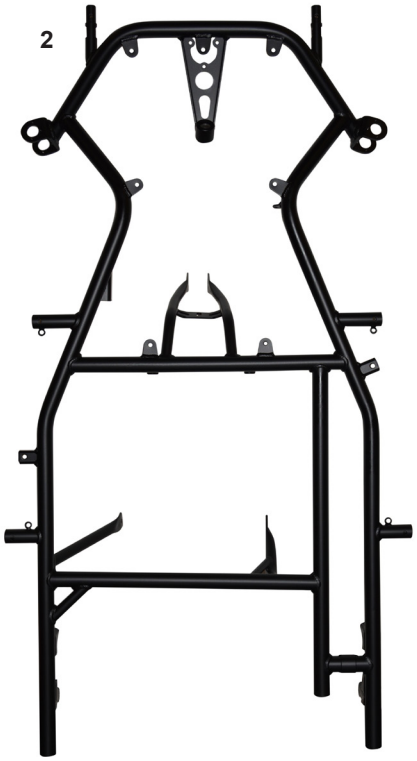


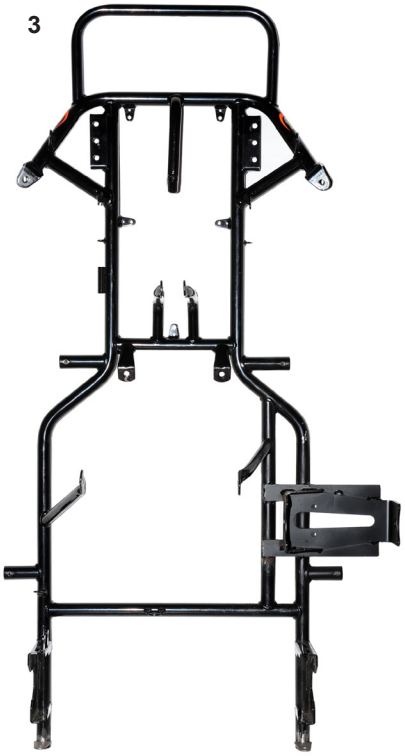


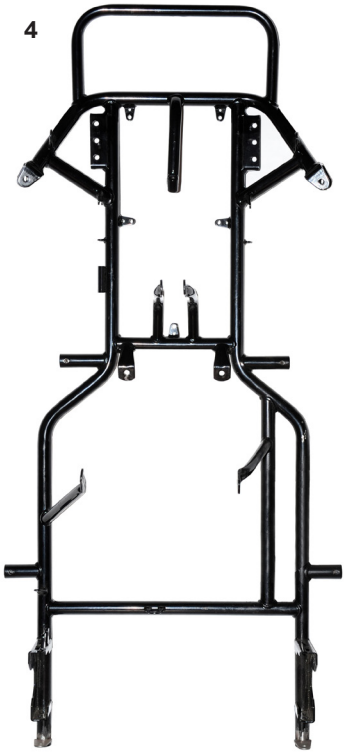


| ES | COD. | DESCRIZIONE | DESCRIPTION |
|---|---|---|---|
| **1** | FVO.05557 | Scocca Mini Black Mirror 950 | Black Mirror frame 950 |
| **2** | FVO.05193 | Scocca Mini Hero 950 | Mini Hero frame 950 |
| **3** | FVO.00048 | Scocca Puffo Honda | Puffo frame Honda |
| **4** | FVO.00084 | Scocca Puffo Comer | Puffo frame Comer |

1

2

3

4

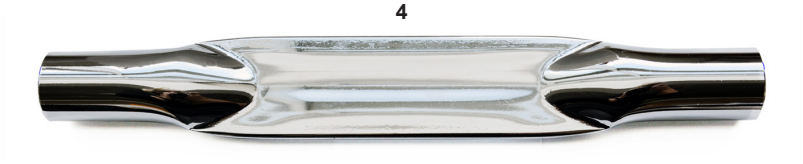

| ES | COD. | DESCRIZIONE | DESCRIPTION |
|---|---|---|---|
| **1** | FMN.00731 | Fascia stabilizzatore nera completa | Torsion band black complete |
| **2** | FMG.00731 | Fascia stabilizzatore oro completa | Torsion band gold complete |
| **3** | SC0.06164 | Barra stabilizzatrice light 30x1 224 RR e KT2/4 | Stabilizer bar light 30x1 224 |
| **3** | SC0.06165 | Barra stabilizzatrice light 30x1 274 | Stabilizer bar light 30x1 274 |
| **3** | SC0.06167 | Barra stabilizzatrice light 30x1 283 KT2 e KT5 | Stabilizer bar light 30x1 283 |
| **4** | FC0.00730 | Stabilizzatore Ø25 L240 anteriore | Front torsion bar Ø25 L240 |
| **4** | FC0.01093 | Stabilizzatore Ø30 L300 anteriore | Front torsion bar Ø30 L300 |
| **4** | FC0.01092 | Stabilizzatore Ø30 L480 anteriore | Front torsion bar Ø30 L3480 |

A

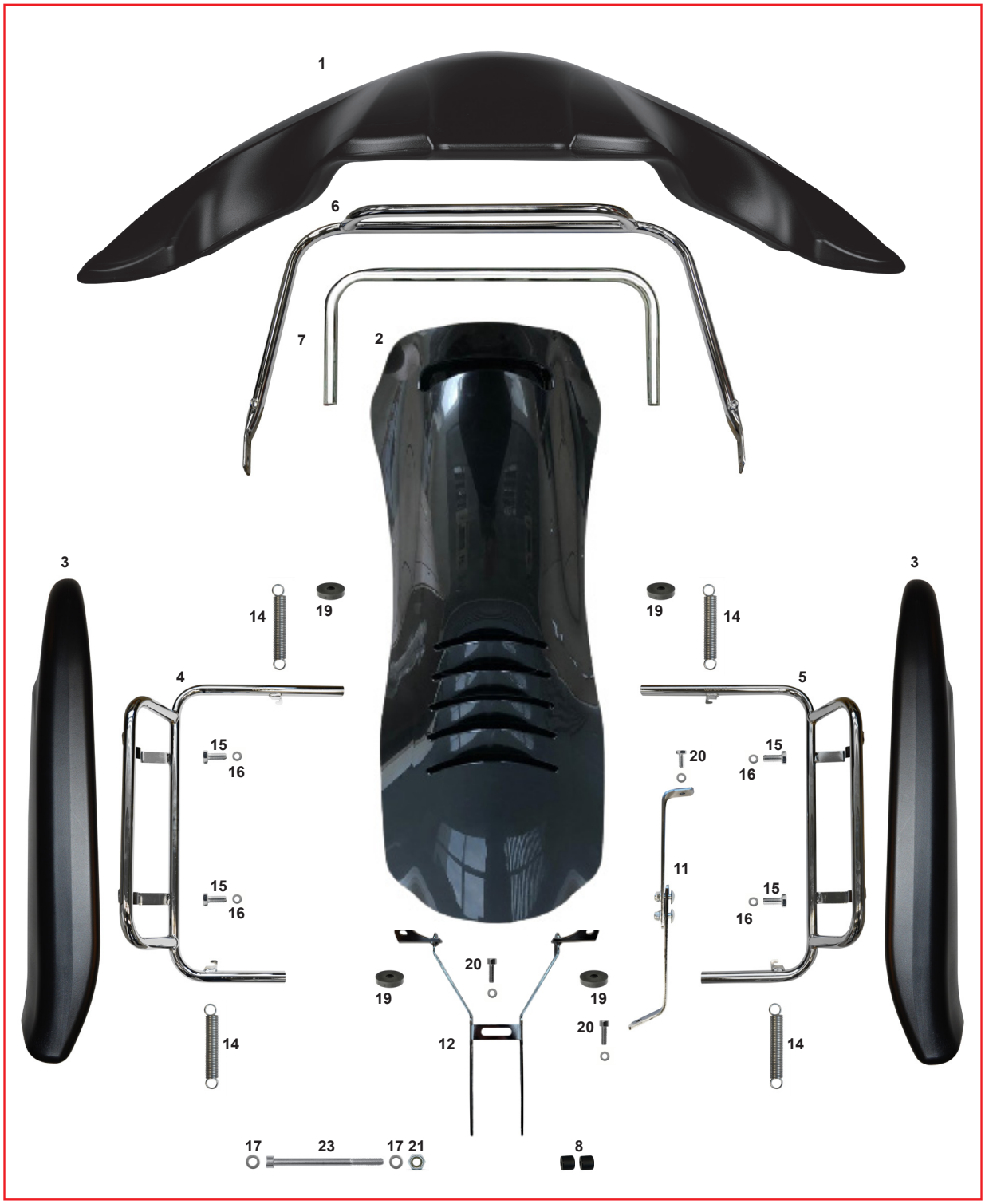
1
6
7
2
3
3
14
19
19
14
4
5
15
16
20
15
16
11
15
16
15
16
20
19
19
20
12
14
14
17
23
17
21
8

B

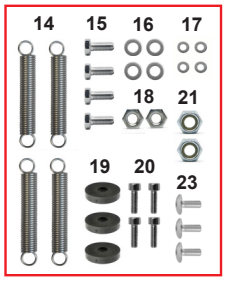
14
15
16
17
18
21
19
20
23

C

10
9

24

25

| ES | COD. | DESCRIZIONE | DESCRIPTION |
|---|---|---|---|
| **A** | CRG.06750 | Kit carene 507/509 compl. di attacchi nero | 507/509 fairing kit complete black |
| | CRG.06750PERLA | Kit carene 507/509 compl. di attacchi perla | 507/509 fairing kit complete pearl |
| | FK0.06750 | Kit carene 507/509 plastica nero | 507/509 fairing plastic black |
| **1** | AFS.06736 | Spoiler nero 509 CIK/FIA nero | 509 CIK/FIA front spoiler black |
| | AFS.06736PERLA | Spoiler nero 509 CIK/FIA perla | 509 CIK/FIA front spoiler pearl |
| **2** | AFS.06737 | Frontalino nero 509 | 509 front fairing black |
| | AFS.06737PERLA | Frontalino perla 509 | 509 front fairing pearl |
| **3** | AFS.05865 | Carenatura laterale 507 dx sx nera | 507 side fairing right left black |
| | AFS.05865PERLA | Carenatura laterale 507 dx sx perla | 507 side fairing right left pearl |
| **4** | SC0.5844S | Paraurti laterale 507 sinistro | Side bumper 507 left |
| **5** | SC0.5844D | Paraurti laterale 507 destro | Side bumper 507 right |
| **6** | SC0.05895 | Paraurti anteriore superiore 507/508 | Front bumper top bar 507/508 |
| **7** | SC0.01355 | Parauti anteriore inferiore 507/509 | Front bumper bar bottom 507/509 |
| **8** | FAN.00355 | Spessore 6,5-18x14 frontalino nero | Spacer 6,5-18x14 front fairing black |
| **9** | AFS.00504 | Supporto spoiler plastica (singolo) | Spoiler plastic support (single) |
| **10** | AFS.00503 | Gancio rapido spoiler | Fast clamps for spoiler |
| **11** | FK0.04457 | Supporto frontalino inferiore reg. compl. | Front fairing support below adj. complete |
| **12** | SC0.06752 | Supporto frontalino superiore 509 | Front fairing support top 509 |
| **B** | PMV.06720 | Kit viti montaggio per 507/509 | Screw mounting kit for 507/509 |
| **14** | FZ0.01439 | Molla paraurti laterale | Side bumper spring |
| **15** | AFN.04325 | Vite M 8x16 esagonale | M 8x16 hexagonal head screw |
| **16** | AFN.00350 | Rondella 8,5-16x1,5 | Washer 8,5-16x1,5 |
| **17** | AFN.00105 | Rondella 6,5-12x1,5 | Washer 6,5-12x1,5 |
| **18** | AFN.00106 | Dado M 6 autoblock basso | Nut M 6 low self-locking |
| **19** | AFS.00258 | Gommino pianale | Floor tray rubber |
| **20** | AFN.00183 | Vite M 6x20 cilindrica | M 6x20 socket head screw |
| **C** | FK0.05233 | Kit fissaggio spoiler KG 507/509-MK20/27 | KG spoiler 507/509-MK20/27 fix kit |
| **21** | AFN.00264 | Dado M6 autobloccante alto | Nut M6 high self-locking |
| **22** | AFN.00404 | Vite M 6x90 cilindrica | M 6x90 socket head screw |
| **23** | AFS.00261 | Vite testa tonda larga M 6x16 pianale | Floor tray large head screw M 6x16 |
| **24** | AFS.06737.SUP | Frontalino 509 parte superiore nero | Front fairing 509 upper part black |
| **25** | AFS.06737.INF | Frontalino 509 parte inferiore nero | Front fairing 509 lower part black |

A

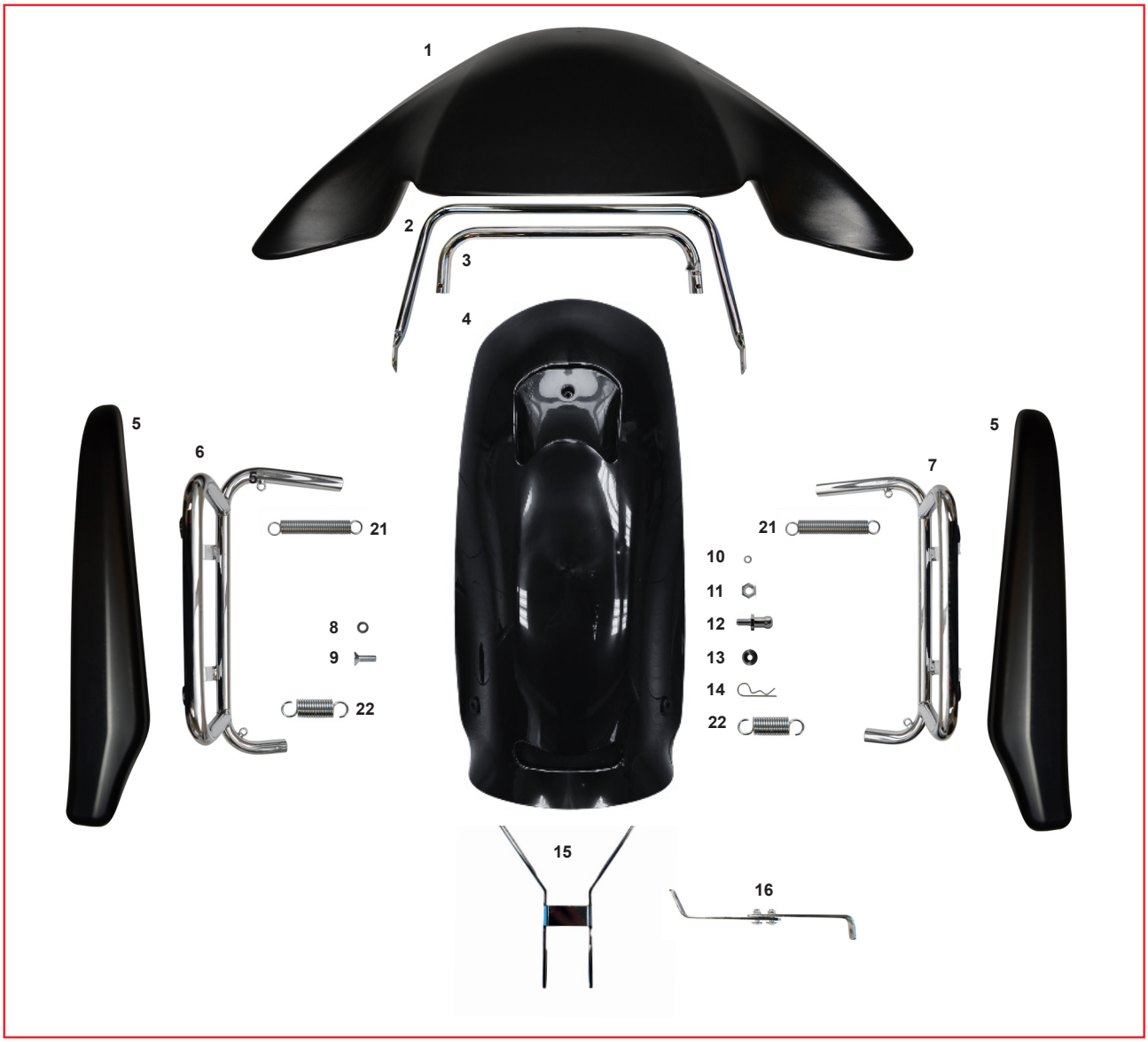


24

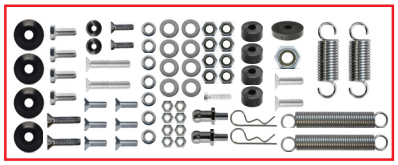

23

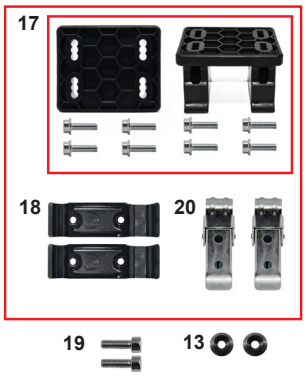


4b

| ES | COD. | DESCRIZIONE | DESCRIPTION |
|---|---|---|---|
| **A** | CRG.06751 | Kit carene Mini MK20/27 compl. con attacchi | Mini MK20/27 fairing kit compl. with attach. |
| | FK0.06751 | Kit carene MK20/27 mini plastica nero | Mini MK20/27 fairing kit plastic black |
| **1** | AFS.05287 | Spoiler mini KG MK20 nero | Mini front spoiler KG MK20 black |
| **2** | SC0.05242 | Paraurti anteriore mini superiore | Mini upper front fender |
| **3** | SC0.05103 | Paraurti anteriore inferiore mini | Mini lower front fender |
| **4** | AFS.06738 | Frontalino mini KG MK27 nero | Mini front fairing KG MK27 black |
| **4b** | AFS.06738.INF | Frontalino mini KG MK27 parte inferiore | Mini front fairing KG MK27 lower part |
| **5** | AFS.05266 | Carena laterale mini KG MK20 dx/sx nero | Mini KG side fairing MK20 left/right black |
| **6** | SC0.5269S | Paraurti laterale mini KG MK20 sx | Side fender mini KG MK20 left |
| **7** | SC0.5269D | Paraurti laterale mini KG MK20 dx | Side fender mini KG MK20 right |
| **8** | AFN.00108 | Rondella 8,5-18x2 | Washer 8,5-18x2 |
| **9** | AFN.00145 | Vite M 8X25 svasata | M 8x25 countersunk head screw |
| **10** | AFN.00105 | Rondella 6,5-12x1,5 | Washer 6,5-12x1,5 |
| **11** | AFN.00106 | Dado M6 autoblock basso | Nut M6 low self-locking |
| **12** | SBN.00103 | Perno supporto frontalino inferiore | Front fairing support pin |
| **13** | SAN.00249 | Rondella 6 svasata nera | Washer 6 countersunk black |
| **14** | SZ0.00102 | Spina elastica supporto frontalino | Front fairing elastic support pin |
| **15** | SC0.06821 | Supporto frontalino superiore MK20/27 | Front fairing support upper MK20/27 |
| **16** | FK0.04457 | Supporto frontalino inf. reg. CRG completo | Front fairing support bottom CRG reg. compl. |
| **17** | AFS.03287 | Kit fissaggio attacco spoiler CIK-FIA NA3 | NA3 Spoiler CIK-FIA kit assy |
| **18** | AFS.00504 | Supporto spoiler plastica (singolo) | Spoiler plastic support (single) |
| **19** | AFN.00183 | Vite M 6x20 cilindrica | M 6x20 socket head screw |
| **20** | AFS.00503 | Gancio rapido spoiler (singolo) | Fast clamps for spoiler (single) |
| **21** | FZ0.01439 | Molla paraurti laterale | Side bumper spring |
| **22** | FZ0.05265 | Molla paraurti laterale mini | Side bumper spring mini |
| **23** | FK0.05233 | Kit fissaggio spoiler KG MK20/27-MK20-MK14 | KG spoiler MK20/27-MK20-MK14 fix kit |
| **24** | FKN.06754 | Kit completamento telaio Mini R2.0 MK20/27 | Completing kit Mini chassis R2.0 MK20/27 |

A

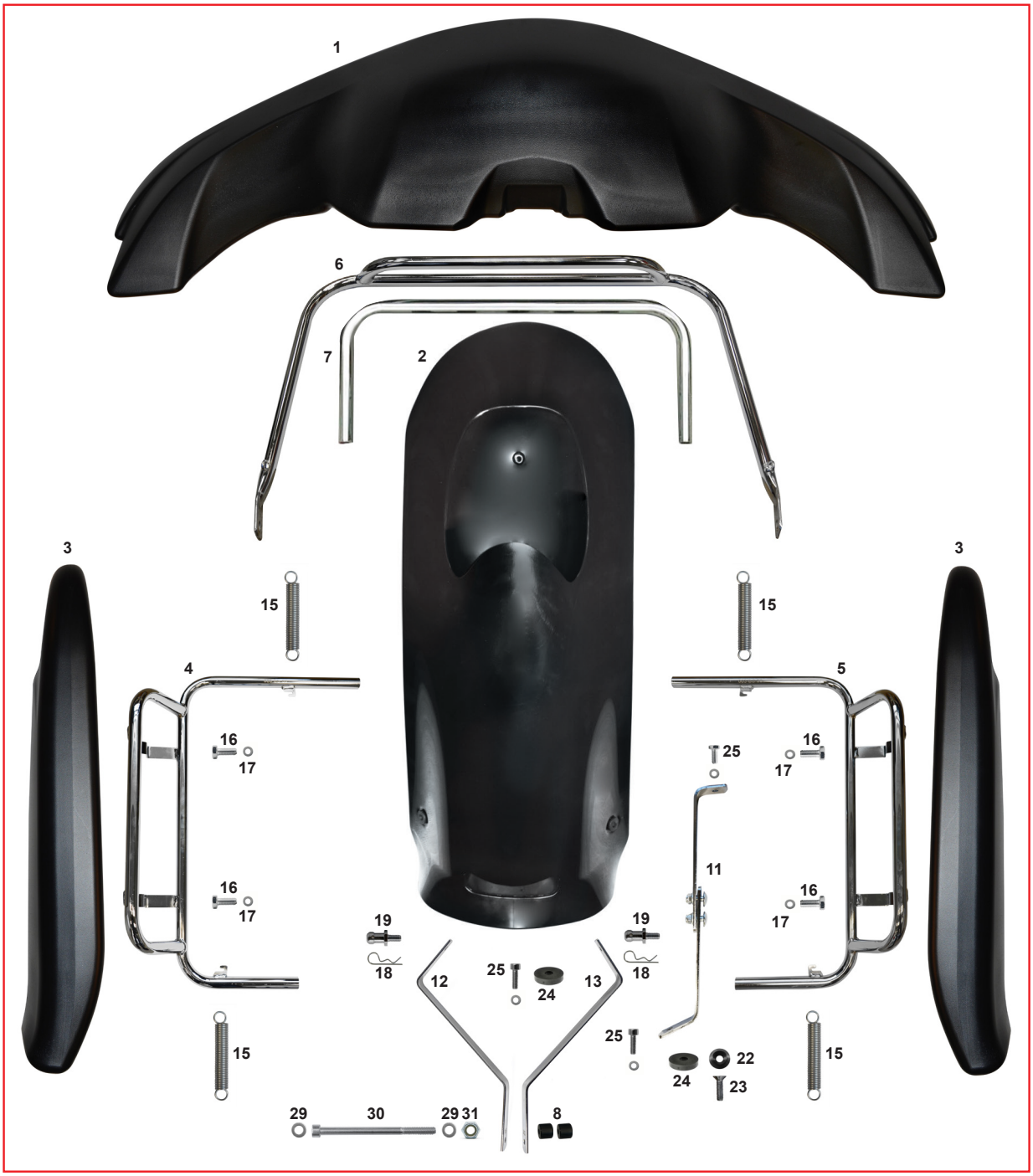
1
6
7
2
3
3
15
15
4
5
16
17
25
16
17
11
16
17
16
17
19
19
18
18
12
25
24
13
25
22
24
23
15
15
29
30
29
31
8

B

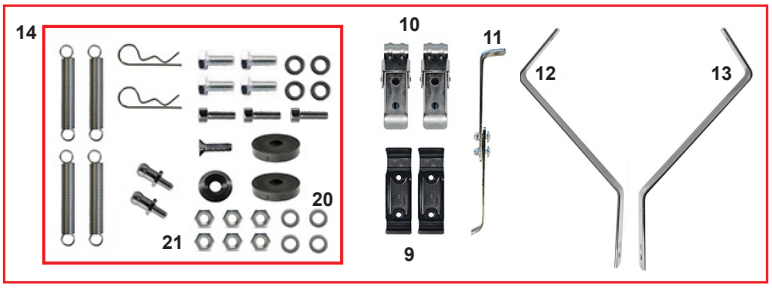
14
10
11
12
13
20
21
9

C

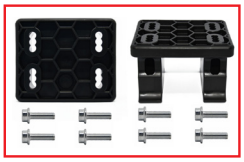

28

26

27

| ES | COD. | DESCRIZIONE | DESCRIPTION |
|---|---|---|---|
| **A** | CRG.05930 | Kit carene 507/508 compl. di attacchi nero | 507/508 fairing kit complete black |
| | CRG.05930PERLA | Kit carene 507/508 compl. di attacchi perla | 507/508 fairing kit complete pearl |
| | FK0.05930 | Kit carene 507/508 plastica nero | 507/508 fairing plastic black |
| **1** | AFS.05866 | Spoiler nero 507 CIK/FIA nero | 507 CIK/FIA front spoiler black |
| | AFS.05866PERLA | Spoiler nero 507 CIK/FIA perla | 507 CIK/FIA front spoiler pearl |
| **2** | AFS.05868 | Frontalino nero 508 | 508 front fairing black |
| | AFS.05868PERLA | Frontalino perla 508 | 508 front fairing pearl |
| **3** | AFS.05865 | Carenatura laterale 507 dx sx nera | 507 side fairing right left black |
| | AFS.05865PERLA | Carenatura laterale 507 dx sx perla | 507 side fairing right left pearl |
| **4** | SC0.5844S | Paraurti laterale 507 sinistro | Side bumper 507 left |
| **5** | SC0.5844D | Paraurti laterale 507 destro | Side bumper 507 right |
| **6** | SC0.05895 | Paraurti anteriore superiore 507/508 | Front bumper top bar 507/508 |
| **7** | SC0.01355 | Parauti anteriore inferiore 507/509 | Front bumper bar bottom 507/509 |
| **8** | FAN.00355 | Spessore 6,5-18x14 frontalino nero | Spacer 6,5-18x14 front fairing black |
| **9** | AFS.00504 | Supporto spoiler plastica | Spoiler plastic support |
| **10** | AFS.00503 | Gancio rapido spoiler | Fast clamps for spoiler |
| **11** | FK0.04457 | Supporto frontalino inferiore reg. compl. | Front fairing support below adj. complete |
| **12** | SC0.5903S | Supporto frontalino superiore sx | Front fairing support top left |
| **13** | SC0.5903D | Supporto frontalino superiore dx | Front fairing support top right |
| **14** | PMV.05925 | Kit viti montaggio | Screw mounting kit |
| **15** | FZ0.01439 | Molla paraurti laterale | Side bumper spring |
| **16** | AFN.04325 | Vite M 8x16 esagonale | M 8x16 hexagonal head screw |
| **17** | AFN.00350 | Rondella 8,5-16x1,5 | Washer 8,5-16x1,5 |
| **18** | SZ0.00102 | Spina elastica supporto frontalino | Front fairing elastic pin |
| **19** | SBN.00103 | Perno supporto frontalino inferiore nero | Front fairing support pivot black lower |
| **20** | AFN.00105 | Rondella 6,5-12x1,5 | Washer 6,5-12x1,5 |
| **21** | AFN.00106 | Dado M 6 autoblock basso | Nut M 6 low self-locking |
| **22** | SAN.00249 | Rondella 6 svasata nera | Washer 6 countersunk black |
| **23** | AFN.00261 | Vite M 6x20 svasata | M 6x20 countersunk head screw |
| **24** | AFS.00258 | Gommino pianale | Floor tray rubber |
| **25** | AFN.00183 | Vite M 6x20 cilindrica | M 6x20 socket head screw |
| **B** | FKN.05924 | Kit supporti+viti carrozzerie 507/508 | Screw+supports kit for fairings 507/508 |
| **C** | AFS.03287 | Kit fissaggio attacco spoiler CIK-FIA NA3 | Spoiler CIK-FIA NA3 attachment fixing kit |
| **26** | AFS.05867 | Frontalino nero 507 | Front fairing 507 black |
| **27** | AFS.06066 | Frontalino 508 parte inferiore CIK-FIA nero | Front fairing 508 lower part CIK-FIA black |
| **28** | AFS.06065 | Frontalino 508 parte superiore CIK-FIA nero | Front fairing 508 upper part CIK-FIA black |
| **29** | AFN.00105 | Rondella 6,5 - 12x1,5 | Washer 6,5 - 12x1,5 |
| **30** | AFN.00264 | Dado M6 autobloccante alto | Nut M6 high self-locking |
| **31** | AFN.00404 | Vite M 6x90 cilindrica | M 6x90 socket head screw |

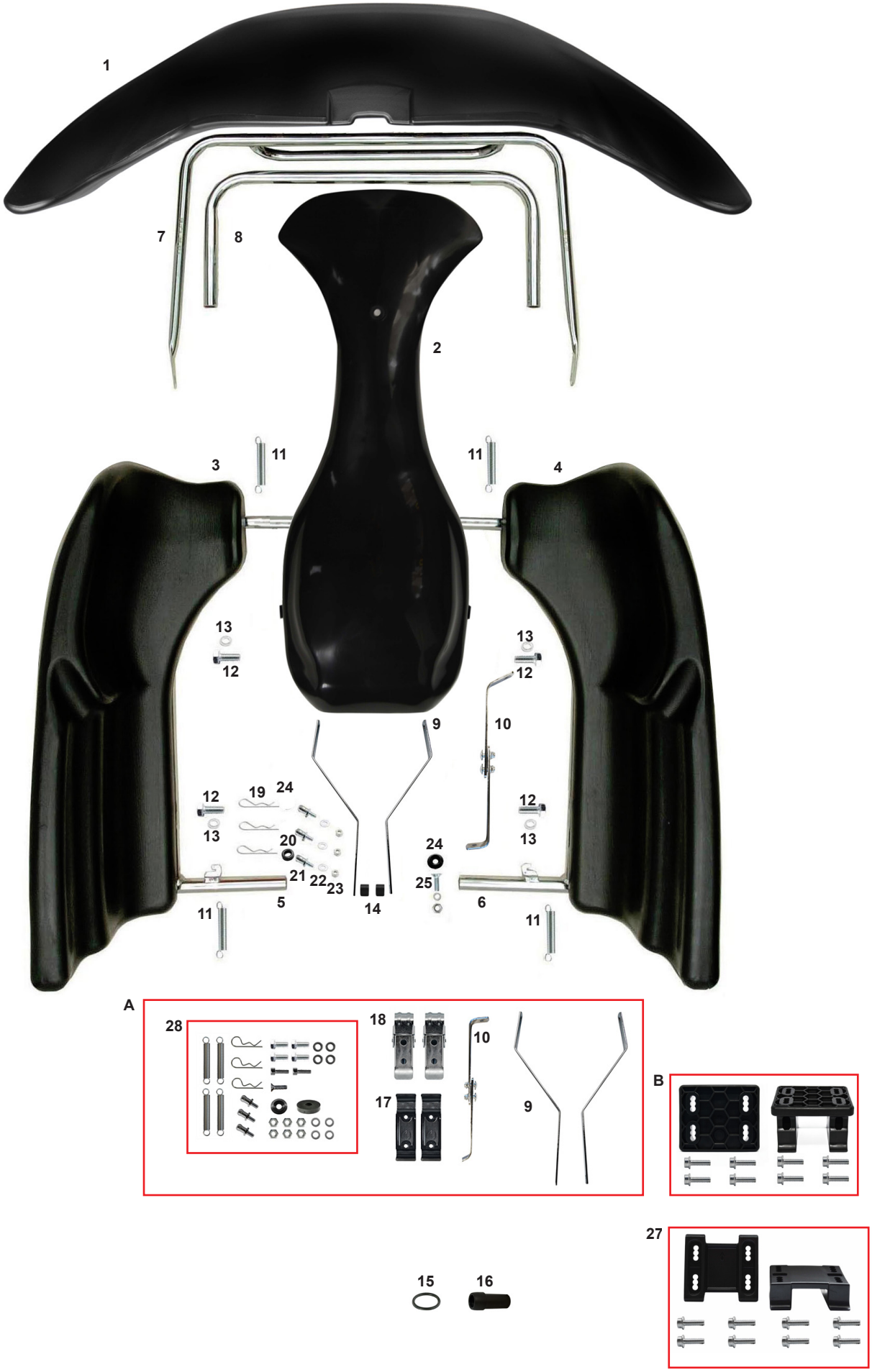
1
7
8
2
3
11
11
4
13
12
13
12
9
10
12
19
24
12
13
20
24
13
21
22
23
25
5
14
6
11
11
A
28
18
10
17
9
B
27
15
16

| ES | COD. | DESCRIZIONE | DESCRIPTION |
|---|---|---|---|
| 1 | AFS.04210PERLA | Spoiler NA3 CIK/FIA perla | NA3 CIK/FIA front spoiler pearl |
| | AFS.04226PERLA | Frontalino NA3 CIK/FIA perla | NA3 CIK/FIA front fairing pearl |
| 2 | AFS.06235 | Frontalino NA3 morbido nero | NA3 soft black front fairing |
| 3 | AFS.4284S | Carenatura laterale NA3 sinistra nera | NA3 side fairing left black |
| 4 | AFS.4284D | Carenatura laterale NA3 destra nera | NA3 side fairing right black |
| 5 | SC0.4327S | Paraurti laterale NA3 sinistro | Side bumper NA3 left |
| 6 | SC0.4327D | Paraurti laterale NA3 destro | Side bumper NA3 right |
| 7 | SC0.04442 | Paraurti anteriore superiore NA2/NA3 | Front bumper top bar NA2/NA3 |
| 8 | SC0.01355 | Parauti anteriore inferiore 507/509 | Front bumper bar below 507/509 |
| 9 | SC0.02452 | Supporto frontalino superiore | Front fairing support top |
| 10 | FK0.04457 | Supporto frontalino inf. reg CRG completo | Compl. CRG adj. lower front fairing support |
| 11 | FZ0.01439 | Molla paraurti laterale | Side bumper spring |
| 12 | AFN.00909 | Vite M 8x20 esagonale | M 8x20 hexagonal head screw |
| 13 | AFN.00350 | Rondella 8,5-16x1,5 | Washer 8,5-16x1,5 |
| 14 | FAN.00355 | Spessore 6,5-18x14 frontalino nero | Front fairing spacer 6,5-18x14 black |
| 15 | AFN.01440 | Or paraurti laterale | O-ring side bumper |
| 16 | SL1.02860 | Boccola paraurti laterale lunga | Long side bumper bushing |
| 17 | AFS.00504 | Supporto spoiler plastica | Spoiler plastic support |
| 18 | AFS.00503 | Gancio rapido spoiler | Fast clamps for spoiler |
| 19 | SZ0.00102 | Spina elastica supporto frontalino | Front fairing elastic pin |
| 20 | AFS.04522 | Gommino supporto frontalino KG | Front fairing rubber KG |
| 21 | SBN.00103 | Perno supporto frontalino inferiore nero | Front fairing support pivot black |
| 22 | AFN.00105 | Rondella 6,5-12x1,5 | Washer 6,5-12x1,5 |
| 23 | AFN.00106 | Dado M 6 autoblock basso | Nut M 6 low self-locking |
| 24 | SAN.00249 | Rondella 6 svasata nera | Washer 6 countersunk black |
| 25 | AFN.00261 | Vite M 6x20 svasata | M 6x20 countersunk head screw |
| 26 | AFS.00258 | Gommino pianale | Floor tray rubber |
| 27 | AFS.03262 | Kit attacco spoiler KG | Spoiler KG connection kit assy |
| 28 | PMV.01582 | Kit montaggio viti | Screw mounting kit |
| A | FKN.04413 | Kit supporti+viti carrozzerie NA3 CIK-FIA | Screw+supports for fairings NA3 CIK-FIA |
| B | AFS.03287 | Kit fissaggio attacco spoiler CIK-FIA NA3 | Spoiler CIK-FIA NA3 kit assy |

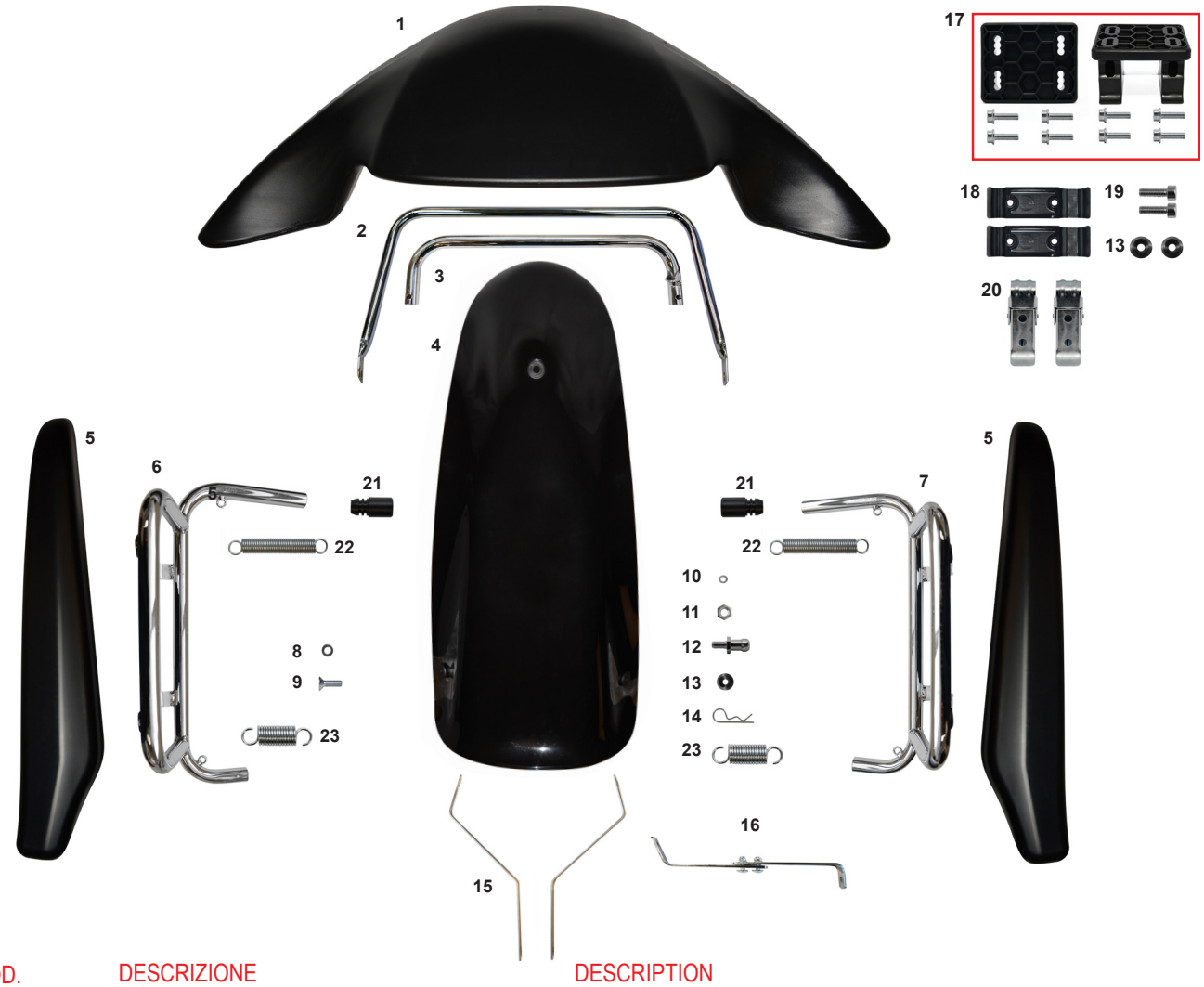


| ES | COD. | DESCRIZIONE | DESCRIPTION |
|---|---|---|---|
| | CRG.06091 | Kit carene MK20 mini compl. nero c/attacchi | Mini MK20 fairing kit complete with attach. |
| | FK0.06090 | Kit carene MK20 mini plastica nero | Mini MK20 fairing kit plastic black |
| **1** | AFS.05287 | Spoiler mini KG MK20 nero | Mini front spoiler KG MK20 black |
| **2** | SC0.05242 | Paraurti anteriore mini superiore | Mini upper front fender |
| **3** | SC0.05103 | Paraurti anteriore inferiore mini | Mini lower front fender |
| **4** | AFS.05288 | Frontalino mini KG MK 20 nero | Mini front fairing KG MK 20 black |
| **5** | AFS.05266 | Carena laterale mini KG MK 20 dx/sx nero | Mini KG side fairing MK 20 left/right black |
| **6** | SC0.5269S | Paraurti laterale mini KG MK 20 sx | Side fender mini KG MK 20 left |
| **7** | SC0.5269D | Paraurti laterale mini KG MK 20 dx | Side fender mini KG MK 20 right |
| **8** | AFN.00108 | Rondella 8,5-18x2 | Washer 8,5-18x2 |
| **9** | AFN.00145 | Vite M 8X25 svasata | M 8x25 countersunk head screw |
| **10** | AFN.00105 | Rondella 6,5-12x1,5 | Washer 6,5-12x1,5 |
| **11** | AFN.00106 | Dado M6 autoblock basso | Nut M6 low self-locking |
| **12** | SBN.00103 | Perno supporto frontalino inferiore | Front fairing support pin |
| **13** | SAN.00249 | Rondella 6 svasata nera | Washer 6 countersunk black |
| **14** | SZ0.00102 | Spina elastica supporto frontalino | Front fairing elastic support pin |
| **15** | SC0.5341S | Supporto frontalino superiore mini MK 20 sx | Front fairing support upper mini MK 20 left |
| **15** | SC0.5341D | Supporto frontalino superiore mini MK 20 dx | Front fairing support upper mini MK 20 right |
| **16** | FK0.04457 | Supporto frontalino inf. reg. CRG completo | Front fairing support bottom CRG reg. compl. |
| **17** | AFS.03287 | Kit fissaggio attacco spoiler CIK-FIA NA3 | NA3 Spoiler CIK-FIA kit assy |
| **18** | AFS.00504 | Supporto spoiler plastica | Spoiler plastic support |
| **19** | AFN.00183 | Vite M 6x20 cilindrica | M 6x20 socket head screw |
| **20** | AFS.00503 | Gancio rapido spoiler | Fast clamps for spoiler |
| **21** | SL1.05216 | TappinoØ20x40 paraurti mini | Ø20x40 mini bumper cap |
| **22** | FZ0.01439 | Molla paraurti laterale | Side bumper spring |
| **23** | FZ0.05265 | Molla paraurti laterale mini | Side bumper spring mini |

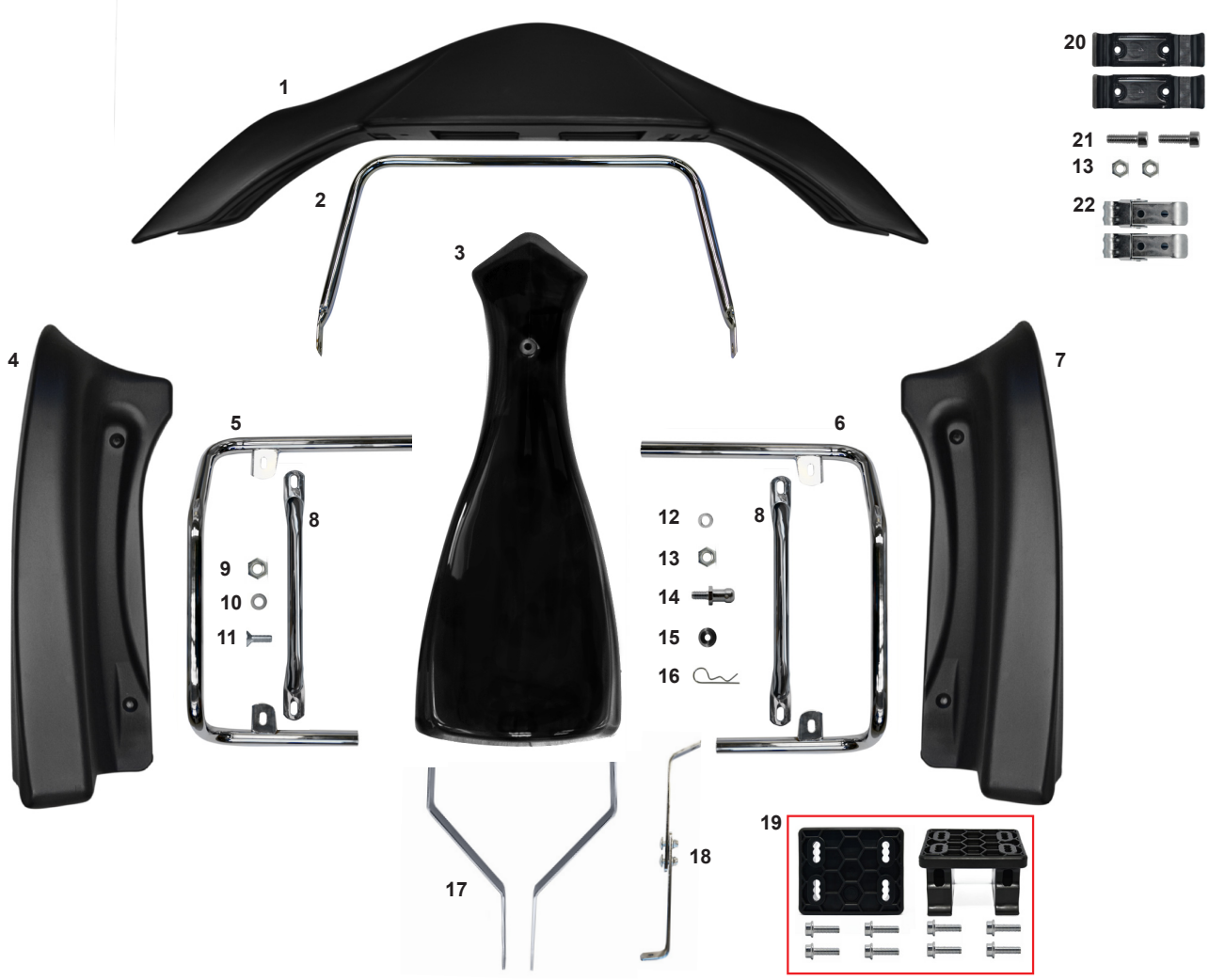


| ES | COD. | DESCRIZIONE | DESCRIPTION |
|---|---|---|---|
| 1 | AFS.04154 | Spoiler mini KG 14 nero | Spoiler mini KG 14 black |
| 2 | SC0.05242 | Paraurti anteriore mini superiore | Mini upper front fender |
| 3 | AFS.03300 | Frontalino mini KG nero | Mini front fairing KG black |
| 4 | AFS.4498S | Carena laterale mini KG MK 14 sx nero | Mini KG side fairing MK 14 left black |
| | AFS.4498SPERLA | Carena laterale mini KG MK 14 sx perla | Mini KG side fairing MK 14 left pearl |
| 5 | SC0.5182S | Paraurti laterale mini FFSA KG MK14 sx | Side fender mini FFSA KG MK14 left |
| 6 | SC0.5182D | Paraurti laterale mini FFSA KG MK14 dx | Side fender mini FFSA KG MK14 right |
| 7 | AFS.4498D | Carena laterale mini KG MK14 dx nero | Mini KG side fairing MK14 right black |
| | AFS.4498DPERLA | Carena laterale mini KG MK14 dx perla | Mini KG side fairing MK14 right pearl |
| 8 | SC0.05268 | Staffa paraurti laterale mini MK14 | Support side fender mini MK14 |
| 9 | AFN.00160 | Dado M8 autoblock basso | Nut M8 low self-locking |
| 10 | AFN.00350 | Rondella 8,5-16x1,5 | Washer 8,5-16x1,5 |
| 11 | AFN.00145 | Vite M8x25 svasata | M8x25 countersunk head screw |
| 12 | AFN.00105 | Rondella 6,5-12x1,5 | Washer 6,5-12x1,5 |
| 13 | AFN.00106 | Dado M6 autoblock basso | Nut M6 low self-locking |
| 14 | SBN.00103 | Perno supporto frontalino inferiore | Lower front fairing support pin |
| 15 | SAN.00249 | Rondella 6 svasata nera | Washer 6 countersunk black |
| 16 | SZ0.00102 | Spina elastica supporto frontalino | Front fairing elastic pin support |
| 17 | SC0.00098 | Supporto frontalino superiore CRG corto | Short CRG upper front panel support |
| 18 | FK0.04457 | Supporto front. inferiore reg. CRG completo | Compl. CRG adj. lower faceplate support |
| 19 | AFS.03287 | Kit fissaggio attacco spoiler CIK-FIA NA3 | Spoiler CIK-FIA NA3 kit assy |
| 20 | AFS.00504 | Supporto spoiler plastica | Spoiler plastic support |
| 21 | AFN.00183 | Vite M 6x20 cilindrica | M 6x20 socket head screw |
| 22 | AFS.00503 | Gancio rapido spoiler (1 pezzo) | Fast clamps for spoiler (1 piece) |

1

A

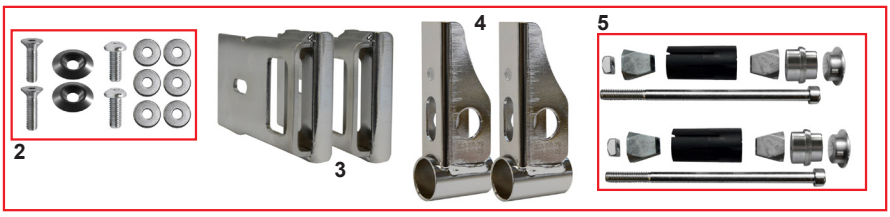


OPZ. B

14

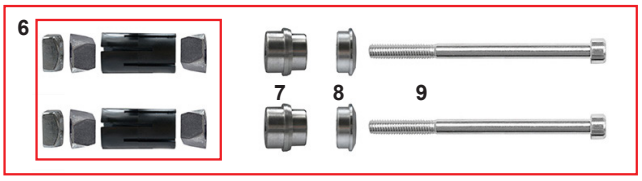


14

10

C

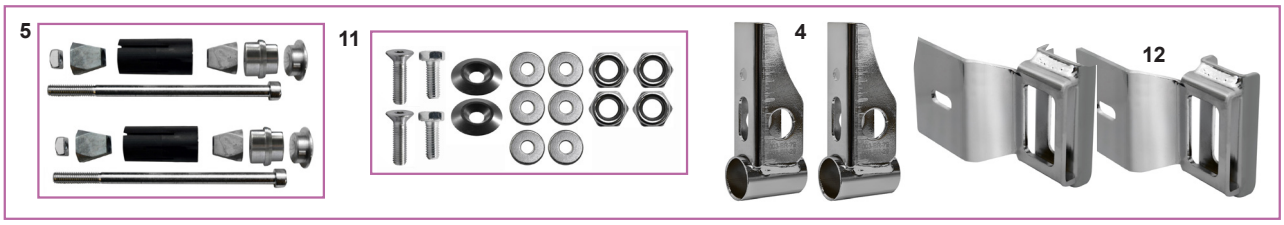


13

A

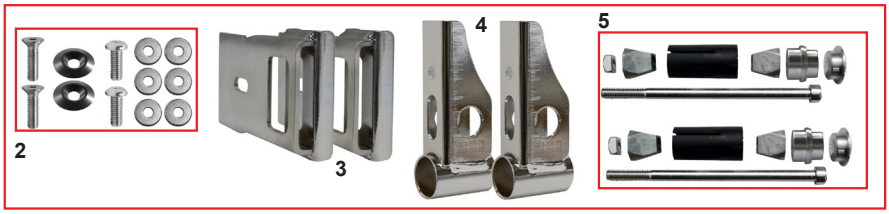


15

| ES | COD. | DESCRIZIONE | DESCRIPTION |
|---|---|---|---|
| **1** | AFS.05869 | Carena posteriore C3 KG | Rear bumper C3 KG |
| **A** | FK0.05229.28 | Kit attacco car. post. CIK/14 Ø28 KG esp. | Rear fairing conn. kit CIK/14 Ø28 KG exp. |
| **A** | FK0.05229.28FS4 | Kit attacco car. post. CIK/14 Ø28 KG FS4 esp. | Rear fairing conn. kit CIK/14 Ø28 KG FS4 exp. |
| **A** | FK0.05229.30 | Kit attacco car. post. CIK/14 Ø30 KG esp. | Rear fairing conn. kit CIK/14 Ø30 KG exp. |
| **A** | FK0.05229.32 | Kit attacco car. post. CIK/14 Ø32 KG esp. | Rear fairing conn. kit CIK/14 Ø32 KG exp. |
| **A** | FK0.05229.30M2 | Kit attacco car. post. CIK/14 Ø30M2 KG esp. | Rear fairing conn. kit CIK/14 Ø30M2 KG exp. |
| **2** | PMV.KG2014 | Kit viti montaggio carena posteriore KG | Rear fairing mounting screw kit KG |
| **3** | SC0.00535 | Piastra supporto carena posteriore KG | Rear fairing support plate KG |
| **4** | SC0.00532 | Supporto carena posteriore KG | Rear fairing support KG |
| **5** | FK0.05228 | Kit vite+esp. car. post. plast. Ø28 Mini+OKJ | Screw kit+rear fairing exp. Ø28 Mini+OKJ |
| OPZ. **B** | FK0.04878 | Kit vite+espansore carena post. plast. Ø30 | Rear fairing screw+expander kit Ø30 |
| **B** | FK0.04878.M2 | Kit vite+espansore carena post. plast. Ø30M2 | Rear fairing screw+expander kit Ø30M2 |
| **B** | FK0.04879 | Kit vite+espansore carena post. plast. Ø32 | Rear fairing screw+expander kit Ø32 |
| **6** | FM0.04878 | Espansore carena post. plast. Ø30 con dado | Rear fairing expander Ø30 with nut |
| **6** | FM0.04879 | Espansore carena post. plast. Ø32 con dado | Rear fairing expander Ø32 with nut |
| **7** | SL1.02263 | Boccola interna Ø23<28 carena posteriore | Internal bushing Ø23<Ø28 rear fairing |
| **7** | SL1.01712 | Boccola interna Ø25<30 carena posteriore | Internal bushing Ø25<Ø30 rear fairing |
| **7** | SL1.01711 | Boccola interna Ø28<32 carena posteriore | Internal bushing Ø28<Ø32 rear fairing |
| **8** | SL1.01710 | Boccola esterna carena posteriore | Rear bumper external bushing |
| **9** | AFN.02476 | Vite M 8x130 cilindrica | M 8x130 socket head screw |
| **10** | AFS.05294 | Carena posteriore mini KG | Carena posteriore mini KG |
| **C** | FK0.05295 | Kit supporti carena posteriore mini KG | Rear bumper clamps kit mini KG |
| **11** | PMV.C.MINI2020 | Kit viti montaggio carena posteriore KG mini | Rear bumper screw assembly kit mini KG |
| **12** | SC0.05187 | Piastra supporto carena posteriore KG mini | KG mini rear fairing support plate |
| **13** | AFS.00532 | Carena posteriore KG CIK/14 | Rear bumper KG CIK/14 |
| **14** | AFS.06048 | Carena esterna spoiler post. C3 KG (1 pz.) | C3 KG rear spoiler external part (1 piece) |
| **15** | FK0.06064 | Kit vite carena post. parte esterna C3 KG | External rear fairing screw kit C3 KG |

**APPLICAZIONE ADESIVO FRONTALINO**

1) Applicare l'adesivo n.1 partendo dal basso
2) Applicare l'adesivo n.2 centrandolo in base ai lati e partendo dall'alto
3) Applicare gli adesivi n.3 e n.4 partendo dal basso dei lati più esterni, salendo e andando verso il centro.
4) Applicare l'adesivo n.5 centrandolo tra gli adesivi n.3 e n.4

**FRONT FAIRING STICKER APPLICATION**

1) Apply sticker no.1 starting from the bottom
2) Apply sticker no. 2 by centering it on the sides and starting from the top
3) Apply stickers no.3 and no.4 starting from the bottom of the outermost sides, going up and going towards the center.
4) Apply sticker no. 5 by centering it between the no. 3 and no. 4

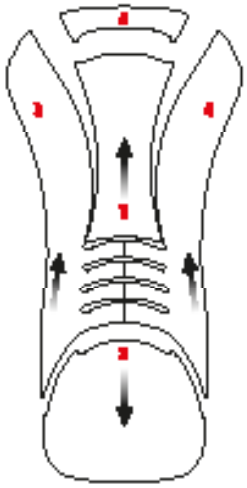


1

| ES | COD. | DESCRIZIONE | DESCRIPTION |
|---|---|---|---|
| 1 | AFS.06739 | Kit adesivi CRG 507/509 completo | Stickers kit 507/509 complete |
| 2 | AFS.06741 | Kit adesivi frontalino 509 | Front fairing stickers kit 509 |
| 3 | AFS.06766 | Kit adesivi tanica Lt. 8,5 509 | Tank stickers kit Lt. 8,5 509 |
| 4 | AFS.06740 | Kit adesivo spoiler 509 | Spoiler sticker kit 509 |
| 5 | AFS.06764 | Kit adesivi carene laterali 507 | Side fairings stickers kit 507 |
| 6 | AFS.06765 | Adesivo portanumero posteriore 509 | Rear number plate sticker 509 |

# KIT ADESIVI - STICKERS KIT

1

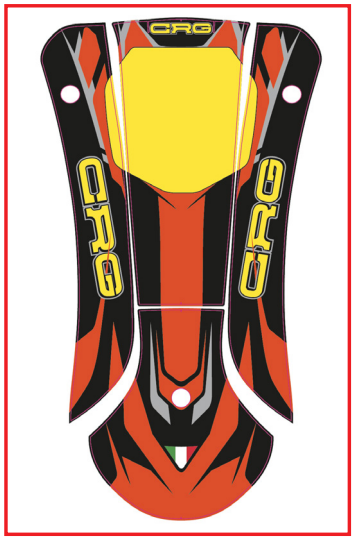

| ES | COD. | DESCRIZIONE | DESCRIPTION |
|---|---|---|---|
| 1 | AFS.06732 | Kit adesivi CRG 507/508 completo | Stickers kit 507/508 complete |
| 2 | AFS.05888 | Kit adesivi frontalino 508 | Front fairing stickers kit 508 |
| 3 | AFS.05899 | Kit adesivi tanica Lt. 8,5 | Tank stickers kit Lt. 8,5 |
| 4 | AFS.05889 | Kit adesivo spoiler 507 | Spoiler sticker kit 507 |
| 5 | AFS.05886 | Kit adesivi carene laterali 507 | Side fairings stickers kit 507 |
| 6 | AFS.06765 | Adesivo portanumero posteriore 509 | Rear number plate sticker 509 |
| 7 | AFS.05887 | Kit adesivi frontalino 507 | Front fairing stickers kit 507 |
| 8 | AFS.06542 | Kit adesivi carena posteriore DX SX | Rear bumper stickers kit RH LH |
| 9 | AFS.05898 | Kit adesivi carene laterali NA3 | Side fairings stickers kit NA3 |
| 10 | AFS.05223 | Kit adesivi CRG NA3 spoiler | Stickers kit CRG NA3 spoiler |

# KIT ADESIVI - STICKERS KIT

1

7

11

12

14

13

| ES | COD. | DESCRIZIONE | DESCRIPTION |
|---|---|---|---|
| 1 | AFS.06748 | Kit adesivi Mini MK20/27 completo | Stickers kit Mini MK20/27 complete |
| 2 | AFS.06742 | Kit adesivi frontalino CRG Mini MK27 | CRG Mini MK27 front fairing stickers kit |
| 3 | AFS.06770 | Kit adesivi CRG mini tanica LT.3 MK20/27 | Tank stickers kit mini LT.3 CRG MK20/27 |
| 4 | AFS.05390 | Tabella portanumero Mini post. MK20/27 | Rear Mini number plate MK20/27 |
| 5 | AFS.06768 | Kit adesivi CRG Mini MK20/27 spoiler | CRG Mini MK20/27 spoiler stickers kit |
| 6 | AFS.06767 | Kit adesivi CRG Mini MK20/27 carene lat. | CRG Mini MK20/27 side fairing stickers kit |
| 7 | AFS.06036 | Kit adesivi Mini MK20 completo | Stickers kit Mini MK20 complete |
| 8 | AFS.06035 | Kit adesivi CRG Mini tanica Lt.3 MK20 | Tank stickers kit Mini LT.3 CRG MK20 |
| 9 | AFS.06033 | Kit adesivi frontalino CRG Mini MK20 | CRG Mini MK20 front fairing stickers kit |
| 10 | AFS.06032 | Kit adesivi CRG Mini MK20 carene laterali | CRG Mini MK20 side fairing stickers kit |
| 11 | AFS.04253 | Kit adesivi paracapelli Puffo | Hair guard sticker kit Puffo |
| 12 | AFS.05282 | Kit adesivi CRG mini MK14 spoiler | Stickers kit CRG mini MK14/spoiler |
| 13 | AFS.05281 | Kit adesivi CRG mini MK14 frontalino | Stickers kit CRG mini MK14/front fair. |
| 14 | AFS.04260 | Kit adesivi CRG mini tanica LT.3 | Tank stickers kit mini LT.3 CRG |

1

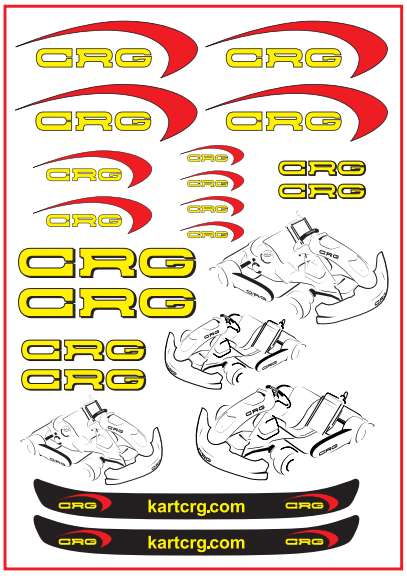


2

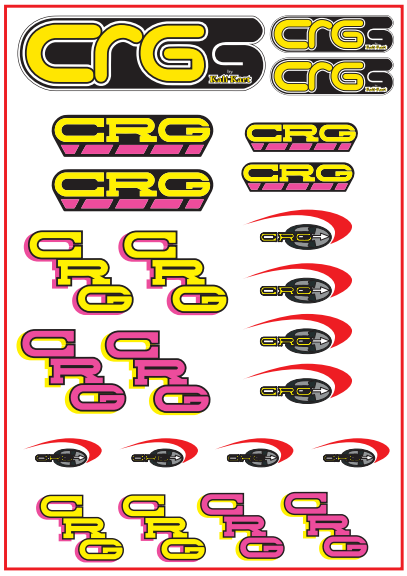


3

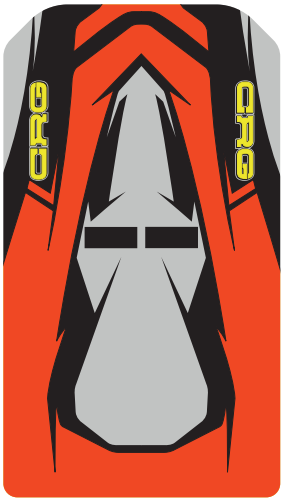


4

5

6

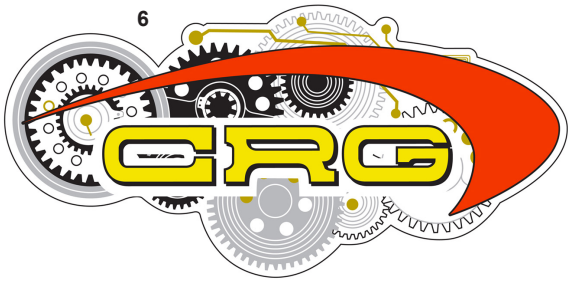


| ES | COD. | DESCRIZIONE | DESCRIPTION |
|---|---|---|---|
| 1 | AFS.01333 | Kit adesivi decorazione | Stickers decoration kit |
| 2 | AFS.01333VINTAGE | Kit adesivi decorazione vintage | Vintage decoration sticker kit |
| 3 | AFS.05990 | Adesivo pianale | Floor tray sticker |
| 4 | AFS.05532NR.** | Adesivo numero opaco nr. | Number sticker matt nr. |
| 5 | AFS.04412 | Kit adesivi CRG tanica LT.5 FS4 | FS4 tank stickers kit LT.5 |
| 6 | AFS.04076 | Adesivo CRG decorazione furgone 120x70 | CRG sticker for van 120x70 |

**** numero adesivo / number sticker 0 / 1 / 2 / 3 / 4 / 5 / 6 / 7 / 8 / 9**

# ACCESSORI TANICA - FUEL TANK ACCESSORIES

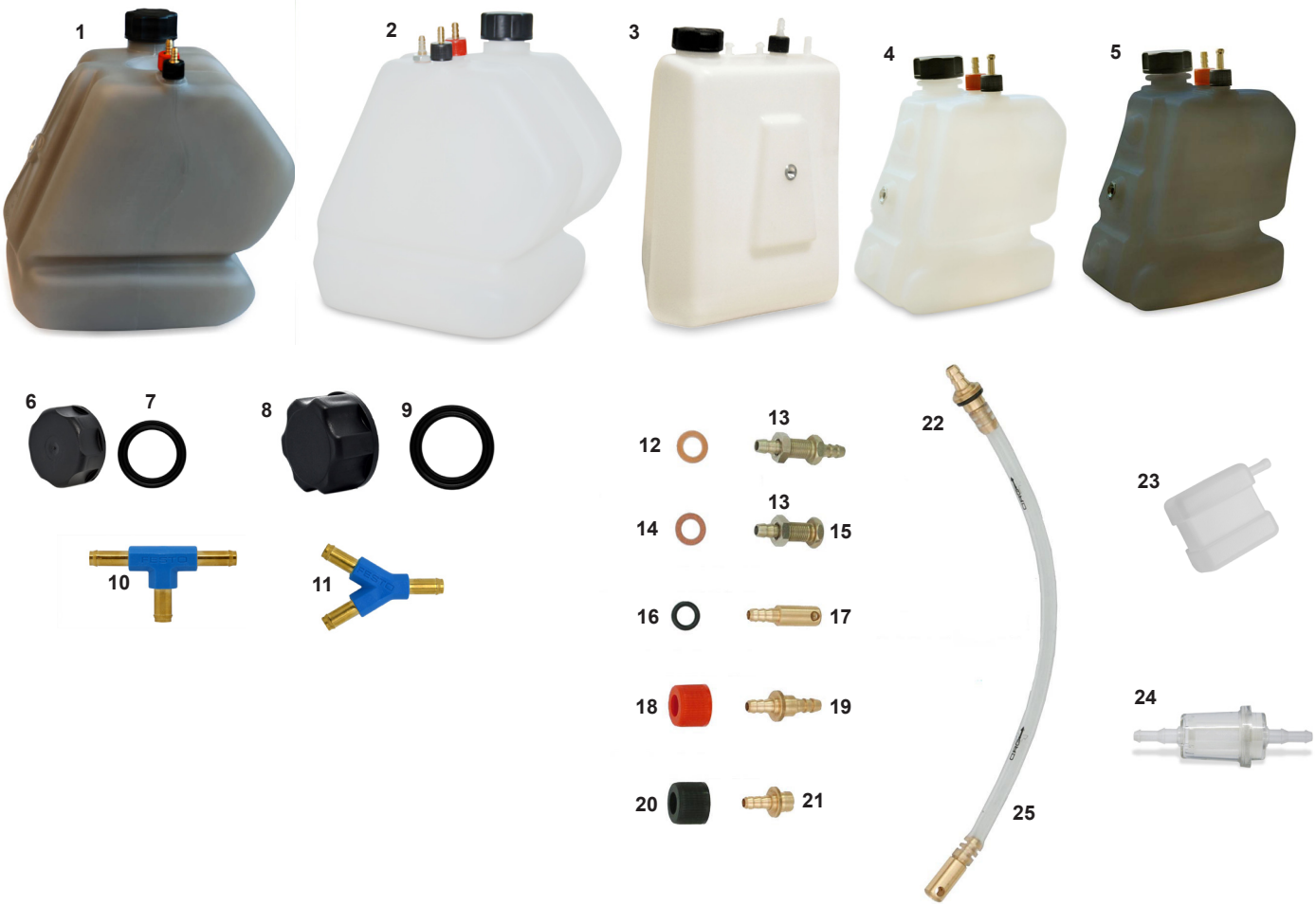


| ES | COD. | DESCRIZIONE | DESCRIPTION |
|---|---|---|---|
| **1** | FM0.04275 | Tanica LT.8,5 OK completa fumè | Fuel tank LT.8,5 OK complete fumè |
| **1** | FM0.04276 | Tanica LT.8,5 KZ completa fumè | Fuel tank LT.8,5 KZ complete fumè |
| **2** | FM0.00322 | Tanica LT.8,5 KZ completa bianca | Fuel tank LT.8,5 KZ complete white |
| **2** | FM0.00138 | Tanica LT.8,5 OK completa bianca | Fuel tank LT.8,5 OK complete white |
| **3** | FM0.04306 | Tanica LT.5 con inserto completa FS4 | Fuel tank LT.5 whit insert complete FS4 |
| **4** | AFS.02766 | Tanica LT.3,5 mini completa bianca | Fuel tank LT.3,5 mini complete white |
| **5** | AFS.04361 | Tanica LT.3,5 mini completa fumè | Fuel tank LT.3,5 mini complete fumè |
| **6** | AFS.01383 | Tappo tanica mini nero | Fuel tank cap mini black |
| **7** | AFS.03611 | Guarnizione tappo tanica mini | Fuel tank cap mini gasket |
| **8** | AFS.00143 | Tappo tanica | Fuel tank cap |
| **9** | AFN.00144 | Guarnizione tappo tanica | Fuel tank cap rubber seal |
| **10** | AFS.01982 | Raccordo T festo | T-fitting festo |
| **11** | AFS.01981 | Raccordo Y festo | Y-fitting festo |
| **12** | AFN.01380 | Rondella 10-16x1 rame | Copper washer 10-16x1 |
| **13** | AFS.00325 | Dado raccordo tanica | Nut fitting tank |
| **14** | AFN.00323 | Rondella 10-16x1 fibra | Fiber washer 10-16x1 |
| **15** | SZ0.00324 | Raccordo ritorno tanica KZ | Return fitting KZ |
| **16** | AFN.01379 | Or raccordo tanica | Fuel tank fitting o-ring |
| **17** | SL1.00147 | Pescante | Fuel tank catch |
| **18** | AFS.00142 | Tappino pescante tanica (rosso) | Fuel research fitting tap (red) |
| **19** | SL1.00149 | Raccordo pescante tanica | Fuel tank catch fitting |
| **20** | AFS.00141 | Tappino sfiato tanica (nero) | Cap fuel tank (black) |
| **21** | SL1.00151 | Raccordo sfiato DD/KZ | Bleeder fitting DD/KZ |
| **22** | CRG.00147 | Pescante tanica LT.8,5 completo | Fuel tank LT.8,5 suction fitting |
| **23** | AFS.00753 | Tanica recupero | Recovery tank |
| **24** | AFS.01016 | Filtro benzina | Fuel filter |
| **25** | AMS.00139 | Tubo benzina al metro | Fuel pipe per meter |

| | COD. | DESCRIZIONE | DESCRIPTION |
|---|---|---|---|
| | FBN.05217S | Assale 30 950 nero S | Axle 30 950 black S |
| | FBN.05217 | Assale 30 950 nero M | Axle 30 950 black M |
| | FBN.05217H | Assale 30 950 nero H | Axle 30 950 black H |
| DD2 | FBN.01663 | Assale 40 DD2 1040 M | Axle 40 DD2 1040 M |
| | FBN.01663S01 | Assale 40 DD2 1040 S | Axle 40 DD2 1040 S |
| | FBN.01663H01 | Assale 40 DD2 1040 H | Axle 40 DD2 1040 H |
| M20 | FBN.00155 | Assale 50 M20 std nero 1020 | Axle 50 M20 std black 1020 |
| | FBN.00155.1040 | Assale 50 M20 std nero 1040 | Axle 50 M20 std black 1040 |
| | FBN.00155.1060 | Assale 50 M20 std nero 1060 | Axle 50 M20 std black 1060 |
| | FBN.01313.1020 | Assale 50 M20 std nero R 1020 | Axle 50 M20 std black R 1020 |
| | FBN.01313 | Assale 50 M20 std nero R 1040 | Axle 50 M20 std black R 1040 |
| | FBN.01313.1060 | Assale 50 M20 std nero R 1060 | Axle 50 M20 std black R 1060 |
| M22 | FBN.02977 | Assale 50 M22 std nero 1020 | Axle 50 M22 std black 1020 |
| S20 | FBN.01309 | Assale 50 S20 std nero 1020 | Axle 50 S20 std black 1020 |
| | FBN.01309.1040 | Assale 50 S20 std nero 1040 | Axle 50 S20 std black 1040 |
| | FBN.01309.1060 | Assale 50 S20 std nero 1060 | Axle 50 S20 std black 1060 |
| S25 | FBN.01311 | Assale 50 S25 std nero 1020 | Axle 50 S25 std black 1020 |
| | FBN.01311.1040 | Assale 50 S25 std nero 1040 | Axle 50 S25 std black 1040 |
| | FBN.01311.1060 | Assale 50 S25 std nero 1060 | Axle 50 S25 std black 1060 |
| T1 | FBN.155T1 | Assale 50 T1 nero 1020 | Axle 50 T1 black 1020 |
| | FBN.155T1.1040 | Assale 50 T1 nero 1040 | Axle 50 T1 black 1040 |
| T2 | FBN.155T2 | Assale 50 T2 nero 1020 | Axle 50 T2 black 1020 |
| | FBN.155T2.1040 | Assale 50 T2 nero 1040 | Axle 50 T2 black 1040 |
| | FBN.155T2.1060 | Assale 50 T2 nero 1060 | Axle 50 T2 black 1060 |
| | FBN.T2RIN | Assale 50 T2 nero Rin. 1020 | Axle 50 T2 black R 1020 |
| | FBN.T2RIN.1040 | Assale 50 T2 nero Rin. 1040 | Axle 50 T2 black R 1040 |
| | FBN.T2RIN.1060 | Assale 50 T2 nero Rin. 1060 | Axle 50 T2 black R 1060 |
| | FBN.155T3 | Assale 50 T3 nero 1020 | Axle 50 T3 black 1020 |
| | FBN.155T3.1040 | Assale 50 T3 nero 1040 | Axle 50 T3 black 1040 |
| | FBN.155T3.1060 | Assale 50 T3 nero 1060 | Axle 50 T3 black 1060 |
| T4 | FBN.155T4 | Assale 50 T4 nero 1020 | Axle 50 T4 black 1020 |
| | FBN.155T4.1040 | Assale 50 T4 nero 1040 | Axle 50 T4 black 1040 |
| | FBN.155T4.1060 | Assale 50 T4 nero 1060 | Axle 50 T4 black 1060 |
| T5 | FBN.155T5 | Assale 50 T5 nero 1020 | Axle 50 T5 black 1020 |
| | FBN.155T5.1040 | Assale 50 T5 nero 1040 | Axle 50 T5 black 1040 |
| | FBN.T5RIN | Assale 50 T5+R 1040 nero | Axle 50 T5 black stiffened 1040 |
| T6 | FBN.155T6 | Assale 50 T6 nero 1020 | Axle 50 T6 black 1020 |
| | FBN.155T6.1040 | Assale 50 T6 nero 1040 | Axle 50 T6 black 1040 |
| | FBN.155T6.1060 | Assale 50 T6 nero 1060 | Axle 50 T6 black 1060 |
| **1** | FKG.02627 | Kit bussola assale DD2 oro | Bushing kit for axle DD2 gold |
| **2** | AFS.00246 | Chiavetta assale 2 pioli | Rear axle keyway 2 pins |
| **3** | AFS.00247 | Chiavetta assale 3 pioli | Rear axle keyway 3 pins |
| **4** | FL1.01024 | Rinforzo interno assale nylon 2,5 | Nylon internal spacer 2,5 |

1

2

3

4

Durezza assali - Axles thickness

| Ø30 | | Ø40 | | Ø50 2mm | | Ø50 2,3mm | |
|---|---|---|---|---|---|---|---|
| **S** | HB 90 - 100 | **S** | HB 120 - 130 | **S20** | HB 60 - 70 | **M20/22** | HB 160 - 170 |
| **M** | HB 140 - 150 | **M** | HB 170 - 180 | **T3** | HB 90 - 100 | **Ø50 2,5mm** | |
| **H** | HB 210 - 220 | **H** | HB 180 - 200 | **T6** | HB 110 - 120 | **S25** | HB 80 - 90 |
| | | | | **T7** | HB 140 - 150 | **T1** | HB 110 - 120 |
| | | | | **M20** | HB 160 - 170 | **T4** | HB 130 - 140 |
| | | | | **T2** | HB 200 - 210 | | |
| | | | | **T5** | HB 230 - 250 | | |

A

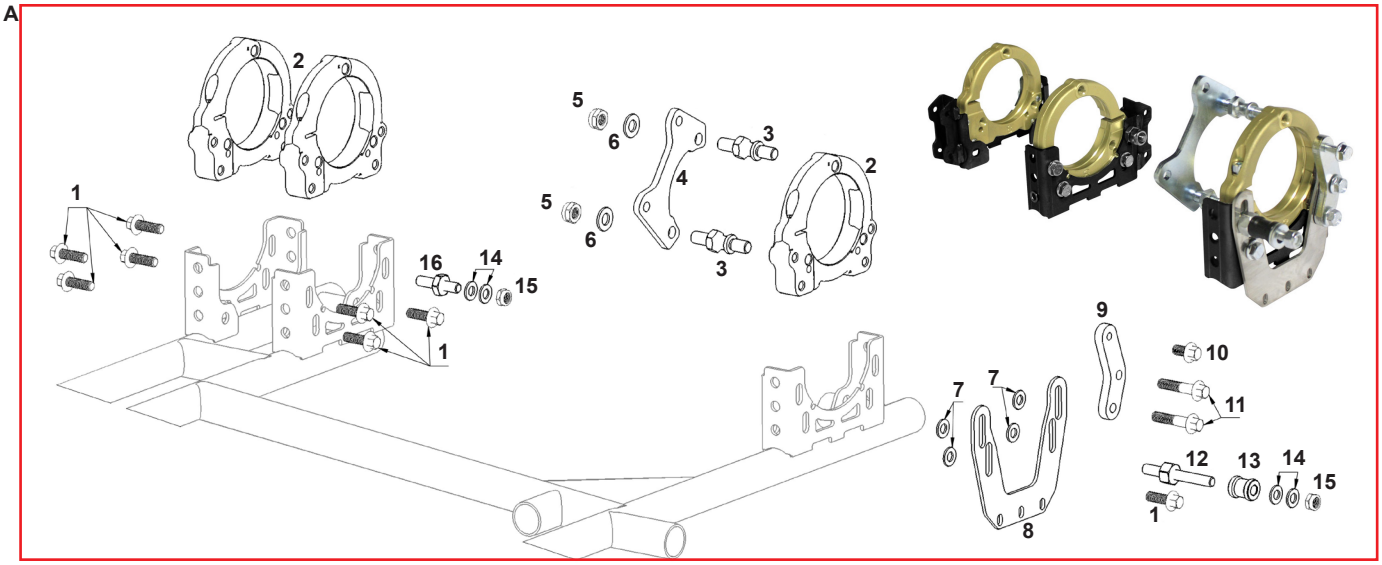


| ES | COD. | DESCRIZIONE | DESCRIPTION |
|---|---|---|---|
| 1 | AFN.00968 | Vite M 8x25 flangiata | M 8x25 flanged screw |
| 2 | FMG.03321 | Flangia assale 50 oro regolabile 2 | Axle flange 50 adjustable system 2 gold |
| 3 | FMG.03323 | Flangia assale 50 oro regolabile 6 | Axle flange 50 adjustable system 6 gold |
| 4 | FMG.03322 | Prigioniero M10x23 piastra pinza V05 | M 10x23 stud brake caliper support V05 |
| 5 | FC0.02869 | Piastra supporto pinza V05 | Brake caliper support V05 |
| 6 | AFN.00657 | Dado M10 autoblock basso | Nut M10 low self-locking |
| 7 | AFN.01637 | Rondella 10,5-20x2 | Washer 10,5-20x2 |
| 8 | AFN.00129 | Rondella 8,5-17x1,5 | Washer 8,5-17x1,5 |
| 9 | AML.02872 | Supporto salvadisco | Disc protection support |
| 10 | SZ0.03143 | Staffa attacco supporto flangia | Plate for seat support rinforcement |
| 11 | AFN.03149 | Vite M 8x20 flangiata | M 8x20 flanged head screw |
| 12 | AFN.00284 | Vite M 8x38 flangiata | M 8x38 flanged head screw |
| 13 | SZ0.03145 | Prigioniero lungo modello X2 | Long stud model X2 |
| 14 | FAN.01462 | Spessore pinza 8,5x18x21 ibrido | Caliper spacer 8,5x18x21 hybrid |
| 15 | AFN.00108 | Rondella 8,5-18x2 | Washer 8,5-18x2 |
| 16 | AFN.00128 | Dado M8 autoblock alto | Nut M8 high self-locking |
| 17 | SZ0.03144 | Prigioniero corto modello X2 | Short stud model X2 |

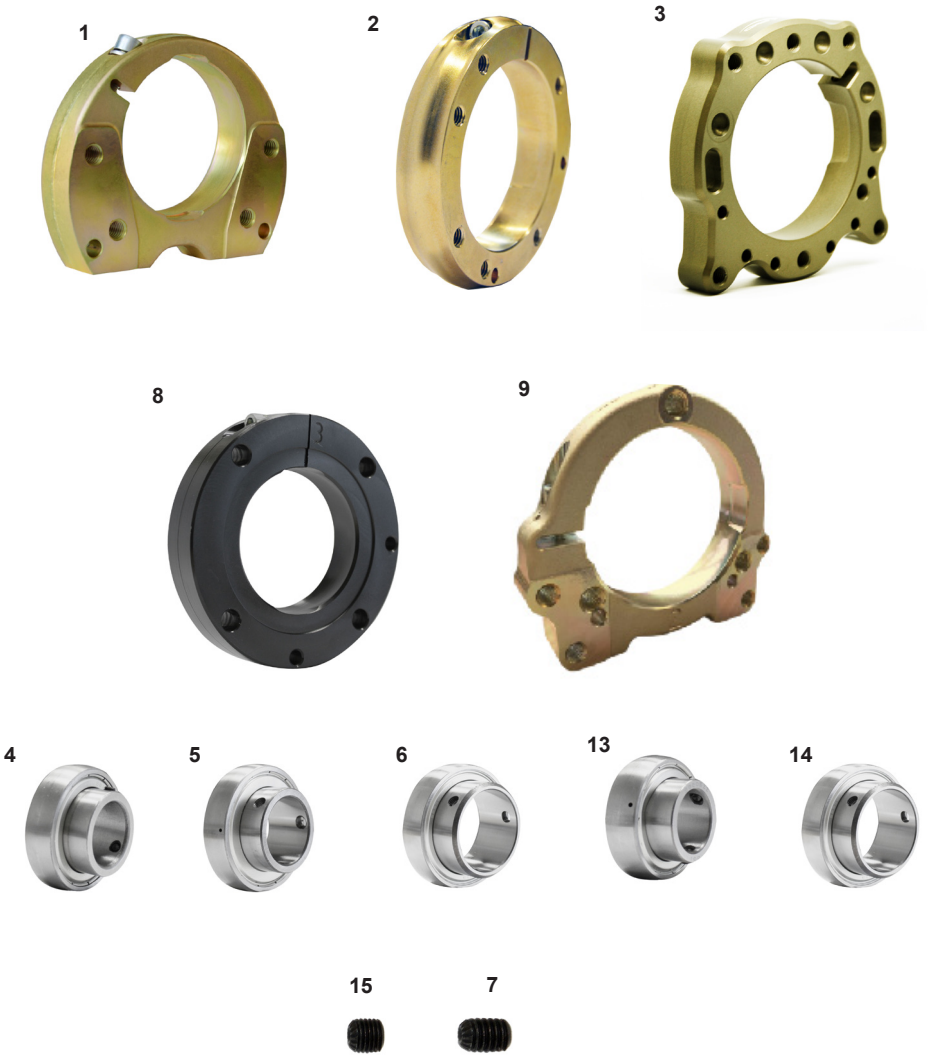


| ES | COD. | DESCRIZIONE | DESCRIPTION |
|---|---|---|---|
| **1** | FMG.00512 | Flangia assale 30 Mini | Axle flange 30 Mini |
| **2** | FMG.03418 | Flangia assale 50 ibrido R-Line all. oro | Axle flange 50 hybrid R-Line gold aluminum |
| **3** | FMG.04951 | Flangia assale 50 ibrido GLM alluminio oro | Axle flange 50 hybrid GLM gold aluminum |
| **4** | AFN.00655 | Cuscinetto assale 30 con grani | Axle bearing 30 with grub screws |
| **5** | AFN.00448 | Cuscinetto assale 40 con grani | Axle bearing 40 with grub screws |
| **6** | AFN.01356 | Cuscinetto assale 50-80 con grani | Axle bearing 50-80 with grub screws |
| **7** | AFN.01372 | Grano M8x8 cuscinetto assale 40/50 | Grub screw M8x8 for axle bearing 40/50 |
| **8** | FMN.02413 | Flangia assale 30 4F NA3 completa | Axle flange 30 4H mini NA3 complete |
| **9** | FMG.02951 | Flangia assale 50 oro riduzione passo 2 | Axle flange 50 adjust. system 2 |
| **10** | FMG.02940 | Flangia assale 50 oro riduzione passo 4 | Axle flange 50 adjust. system 4 |
| **11** | FMG.02939 | Flangia assale 50 oro riduzione passo 6 | Axle flange 50 adjust. system 6 |
| **12** | FMG.02886 | Flangia assale 50 oro riduzione passo 8 | Axle flange 50 adjust. system 8 |
| **13** | AFN.00396 | Cuscinetto assale 25 con grani | Axle bearing 25 with grub screws |
| **14** | AFN.00157 | Cuscinetto assale 50-90 con grani | Axle bearing 50-90 with grub screws |
| **15** | AFN.01373 | Grano M6x6 passo fine | Grub screw M6x6 thin pitch |

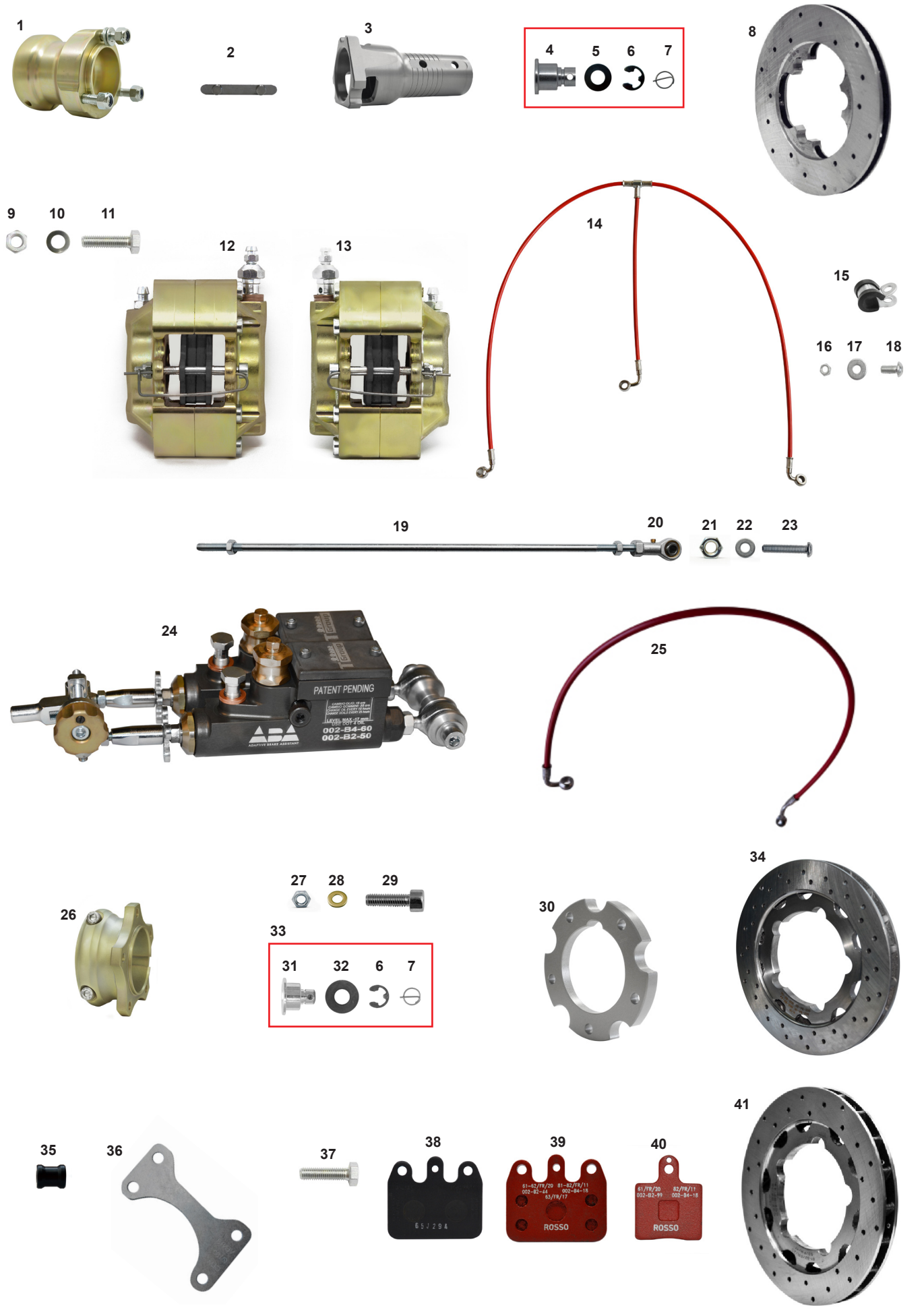
1
2
3
4
5
6
7
8
9
10
11
12
13
14
15
16
17
18
19
20
21
22
23
24
PATENT PENDING
ADA
002-B4-60
002-B2-50
25
26
27
28
29
30
31
32
33
34
35
36
37
38
39
40
41
ROSSO
ROSSO

## KZ IMPIANTO FRENANTE V13 ORO - V13 BRAKE SYSTEM GOLD

| ES | COD. | DESCRIZIONE | DESCRIPTION |
|---|---|---|---|
| MONT.KZ-oro.V13-180 | | Impianto frenante KZ V13 180 oro | Brake system KZ V13 180 gold |
| 1 | FMG.05666 | Mozzo ant. KZ 40x80 R2.0 all. oro compl. | Front hub KZ 40x80 R2.0 alu. gold compl. |
| 2 | AFS.00246 | Chiavetta assale 2 pioli | Rear axle keyway 2 pins |
| 3 | FMN.01893 | Mozzo disco ant. all. KZ V11 25 compl. | Alu. front brake disc hub V11 KZ 25 compl. |
| 4 | SBN.00372 | Bussola disco freno anteriore V11 | Front brake disc V11 bush |
| 5 | AFN.00230 | Rondella disco freno elastica | Brake disc elastic washer |
| 6 | AFN.00231 | Seeger Ø8 disco freno | Circlip Ø8 brake disc |
| 7 | AFS.00232 | Spina elastica Ø10 disco freno | Elastic pin Ø10 brake disc |
| 8 | FL1.04225 | Disco freno anteriore V11 154 std | Brake disc front V11 154 std |
| 9 | AFN.00286 | Dado M8 metalblock | Nut M8 metalblock |
| 10 | AFN.00047 | Rondella 8 ondulata | Undulated washer 8 |
| 11 | AFN.00827 | Vite M 8x30 cilindrica | M 8x30 socket head screw |
| 12 | FMG.4961S | Pinza anteriore oro completa sx | Front caliper gold complete left |
| 13 | FMG.4961D | Pinza anteriore oro completa dx | Front caliper gold complete right |
| 14 | AFS.05832 | Tubo freno tris ant. occhiello rosso ABA | Front brake hose tris ABA red eye |
| 15 | AFN.03912 | Fascetta ferma tubo freno Ø6 | Brake tube clip Ø6 |
| 16 | AFN.00106 | Dado M 6 autoblock basso | Nut M 6 low self-locking |
| 17 | AFN.00361 | Rondella 5,5-15x1,5 | Washer 5,5-15x1,5 |
| 18 | AFN.00359 | Vite M 5x12 bombata | M 5x12 convex head screw |
| 19 | FK0.03936 | Asta freno montata cm.39 | Brake rod assy cm.39 |
| 20 | AFS.05848 | Uniball M6 femmina foro | Uniball M6 female hole |
| 21 | AFN.00360 | Dado M5 autoblock basso | Nut M5 low self-locking |
| 22 | AFN.00361 | Rondella 5,5-15x1,5 | Washer 5,5-15x1,5 |
| 23 | AFN.04636 | Vite M6x30 bombata | M 6x30 convex head screw |
| 24 | FM0.05961 | Pompa freni doppia KZ ABA completa | ABA master cylinder double KZ complete |
| 25 | AFS.05831 | Tubo freno mm735 ABA post. occhiello | Brake tube ABA rear eyelet mm735 |
| 26 | FMG.06224 | Mozzo disco post. 50 R2.1 oro compl. | Rear disc hub aluminum 50 R2.1 gold compl. |
| 27 | AFN.00234 | Dado M 6 metalblock | Nut M 6 metalblock |
| 28 | AFN.06156 | Rondella 6,5-10x1 acciaio inox | Washer 6,5-10x1 inox |
| 29 | AFN.00183 | Vite M 6x20 cilindrica | M 6x20 socket head screw |
| 30 | SAN.01592 | Flangia disco posteriore V11 | Rear brake disc flange V11 |
| 31 | SBN.01660 | Bussola disco freno posteriore V11 | Rear brake disc V11 bushing |
| 32 | AFN.01677 | Rondella disco freno elastica V11 | Rear brake disc elastic washer V11 |
| 33 | FK0.01660 | Bussola disco freno post. V11 compl. | Rear brake disc V11 bush complete |
| 34 | FL1.05827 | Disco freno posteriore V13 Ø180 R2.0 | Rear brake disc V13 Ø180 R2.0 |
| 35 | FAN.01462 | Spessore pinza 8,5x18x21 ibrido | Caliper spacer hybrid 8,5x21x18 |
| 36 | SZ0.05876 | Piastra supporto pinza V13 Ø180 R2.0 | Rear brake caliper plate V13 Ø180 R2.0 |
| 37 | AFN.00107 | Vite M8x25 esagonale | M8x25 hexagonal head screw |
| 38 | AFS.04916 | Pastiglia freno posteriore V11 nera | Rear brake pad V11 black |
| 39 | AFS.01745 | Pastiglia freno post. V11 rossa | Rear brake pad V11 red |
| 40 | AFS.02997 | Pastiglia freno anteriore rossa V11 | Front brake pad V11 red |
| OPZ.41 | FL1.04224 | Disco freno posteriore V11 192 STD | Rear brake disc V11 192 STD |
| | SZ0.06644 | Piastra supporto pinza V13 192 R2.0 | Rear brake disc V13 ø192 R2.0 |

1
2
3
4
5

6

PATENT PENDING
ABA
ADAPTIVE BRAKE ASSISTANT
LEVEL MAX -17 mm
USE DOT 4 OIL
002-B4-60
002-B2-50

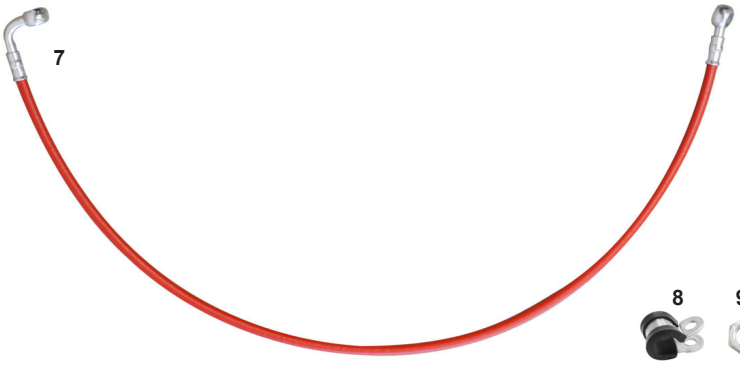
7

8
9
10
11

12

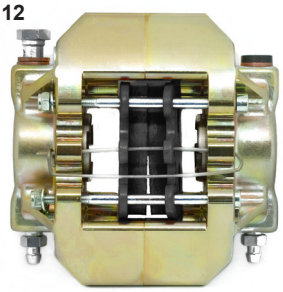

13

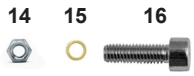
14
15
16

21

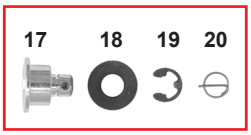
17
18
19
20

22

23

24

25

26

27
ROSSO

28

## DD IMPIANTO FRENANTE V13 ORO - V13 BRAKE SYSTEM GOLD

| ES | COD. | DESCRIZIONE | DESCRIPTION |
|---|---|---|---|
| | MONT.OK-oro V13 180 | Impianto frenante OK V13 180 MG oro | Brake system OK V13 180 MG gold |
| 1 | SBN.00744 | Asta freno cm.38 | Brake rod cm.38 |
| 2 | AFS.05848 | Uniball M6 femmina foro | Uniball M6 female hole |
| | AFS.01364 | Filo frizione | Clutch cable |
| | AFS.00514 | Morsetto filo | Cable clamp |
| 3 | AFN.00360 | Dado M5 autoblock basso | Nut M5 low self-locking |
| 4 | AFN.00361 | Rondella 5,5-15x1,5 | Washer 5,5-15x1,5 |
| 5 | AFN.04636 | Vite M6x30 bombata | M 6x30 convex head acrew |
| 6 | FM0.05362 | Pompa freni ABA completa | ABA master cylinder complete |
| 7 | AFS.05831 | Tubo freno posteriore ABA occ. 735mm | Brake tube ABA rear eyelet 735mm |
| 8 | AFN.03912 | Fascetta ferma tubo freno Ø6 | Brake tube clip Ø6 |
| 9 | AFN.00286 | Dado M 8 metalblock | Nut M 8 metalblock |
| 10 | AFN.00047 | Rondella 8 ondulata | Undulated washer 8 |
| 11 | AFN.00827 | Vite M 8x30 cilindrica | M 8x30 socket head screw |
| 12 | FMG.04962 | Pinza freno post. completa V11 oro | Rear brake caliper complete V11 gold |
| 13 | FMG.06224 | Mozzo disco post. all. 50 R2.1 oro compl. | Rear disc hub alu. 50 R2.1 gold complete |
| 14 | AFN.00234 | Dado M 6 metalblock | Nut M 6 metalblock |
| 15 | AFN.06156 | Rondella 6,5-10x1 acciaio inox | Washer 6,5-10x1 inox |
| 16 | AFN.00183 | Vite M 6x20 cilindrica | M 6x20 socket head screw |
| 17 | SBN.01660 | Bussola disco freno posteriore V11 | Rear brake disc V11 bushing |
| 18 | AFN.01677 | Rondella disco freno elastico V11 | Rear brake disc elastic washer V11 |
| 19 | AFN.00231 | Seeger Ø8 disco freno | Circlip Ø8 brake disc |
| 20 | AFS.00232 | Spina elastica Ø10 disco freno | Elastic pin Ø10 brake disc |
| 21 | FK0.01660 | Bussola disco freno posteriore V11 compl. | Rear brake disc V11 bush complete |
| 22 | FL1.05827 | Disco freno posteriore V13 Ø180 R2.0 | Rear brake disc V13 Ø180 R2.0 |
| 23 | FAN.01462 | Spessore pinza 8,5x18x21 ibrido | Caliper spacer hybrid 8,5x18x21 |
| 24 | SAN.01592 | Flangia disco posteriore V11 | Rear brake disc flange V11 |
| 25 | SZ0.05876 | Piastra supporto pinza V13 Ø180 R2.0 | Rear brake disc V13 Ø180 R2.0 |
| 26 | AFN.00107 | Vite M8x25 esagonale | M8x25 hexagonal head screw |
| 27 | AFS.01745 | Pastiglia freno posteriore V11 rossa | Rear brake pad V11 red |
| 28 | AFS.04916 | Pastiglia freno posteriore V11 nera | Rear brake pad V11 black |
| OPZ. 29 | FL1.04224 | Disco freno posteriore V11 192 STD | Rear brake disc V11 192 STD |

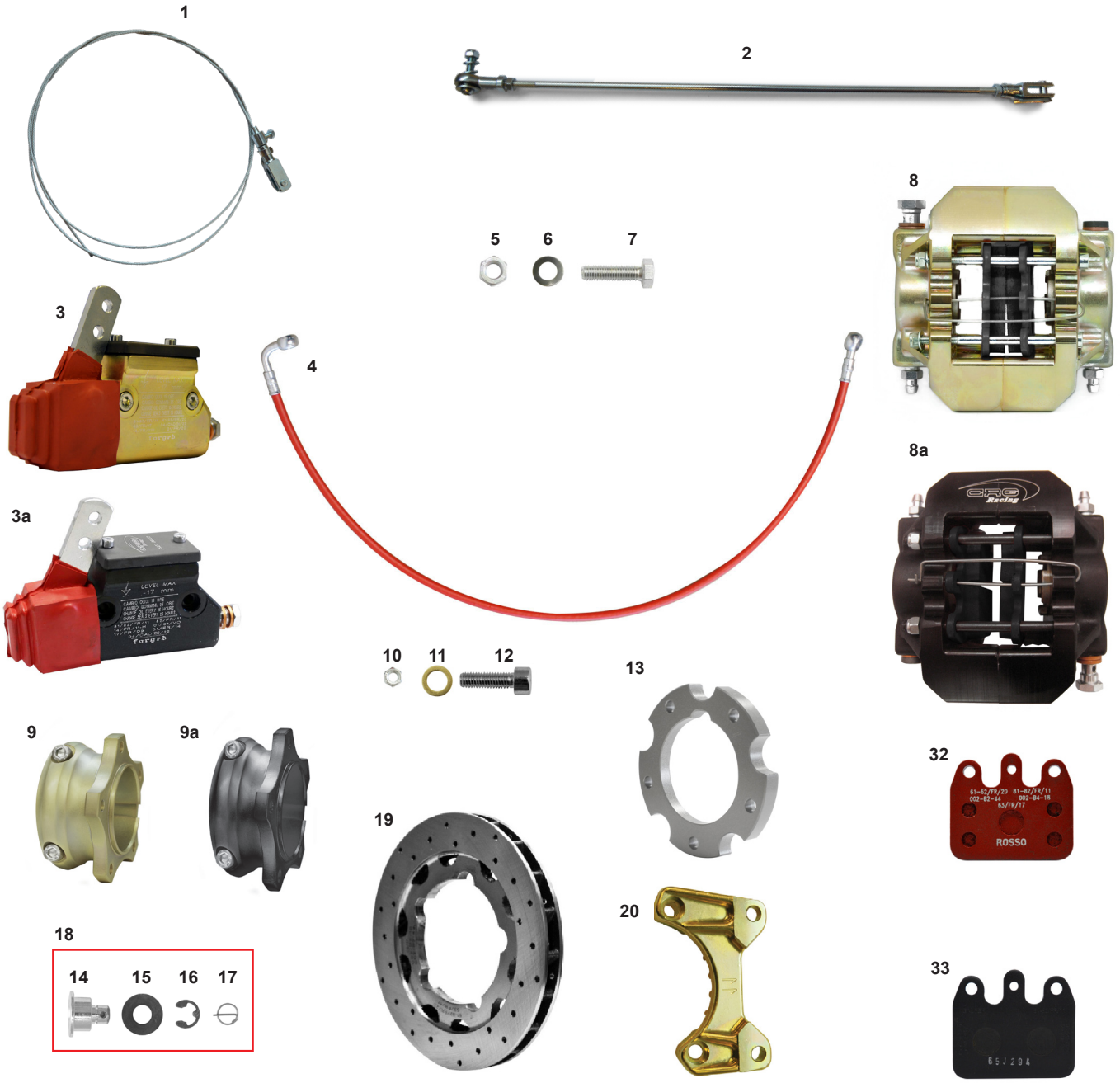
1
2
8
5
6
7
3
4
8a
3a
10
11
12
13
9
9a
32
19
20
18
14
15
16
17
33

OPZ.

A

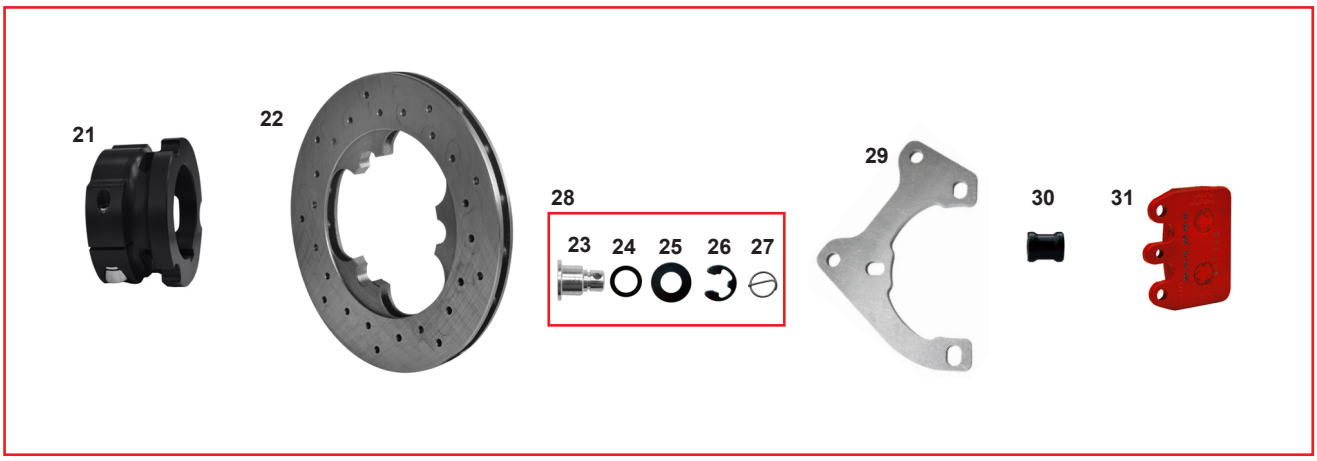
21
22
28
23
24
25
26
27
29
30
31

| ES | COD. | DESCRIZIONE | DESCRIPTION |
|---|---|---|---|
| | MONT.T01Z.oro | Impianto frenante OK V11 192 MG oro | Brake system OK V11 192 MG gold |
| | MONT.T01Z.nero | Impianto frenante OK V11 192 MG nero | Brake system OK V11 192 MG black |
| **1** | FK0.06421 | Cavo freno montato per ped. forgiato | Safety cable assy for forg. pedal |
| **2** | FK0.06459 | Asta freno mont. cm.45 per ped. forgiato | Brake rod assy cm.45 for forg. pedal |
| **3** | FMG.05591 | Pompa freni V11 compl. oro OK-OKJ | Rear master cylinder V11 gold compl. OK-OKJ |
| **3a** | FM0.05591 | Pompa freni V11 compl. nero OK-OKJ | Rear master cylinder V11 bl. compl. OK-OKJ |
| **4** | AFS.00240 | Tubo freno 720 V11 posteriore occh. | Brake tube V11 rear eyelet 720mm |
| **5** | AFN.00286 | Dado M 8 metalblock | Nut M 8 metalblock |
| **6** | AFN.00047 | Rondella 8 ondulata | Undulated washer 8 |
| **7** | AFN.00107 | Vite M 8x25 esagonale | M 8x25 hexagonal head screw |
| **8** | FMG.04962 | Pinza freno post. V11 nera G oro | Rear brake caliper V11black G gold |
| **8a** | FMN.04962 | Pinza freno post. V11 nero | Rear brake caliper V11 black |
| **9** | FMG.06224 | Mozzo disco post. all. 50 R2.1 oro compl. | Rear disc hub alu. 50 R2.1 gold complete |
| **9a** | FMN.06224 | Mozzo disco post. all. 50 R2.1 nero compl. | Rear disc hub alu. 50 R2.1 black complete |
| **10** | AFN.00234 | Dado M 6 metalblock | Nut M 6 metalblock |
| **11** | AFN.06156 | Rondella 6,5-10x1 acciaio inox | Washer 6,5-10x1 inox |
| **12** | AFN.00183 | Vite M 6x20 cilindrica | M 6x20 socket head screw |
| **13** | SAN.01592 | Flangia disco posteriore V11 | Rear brake disc flange V11 |
| **14** | SBN.01660 | Bussola disco freno posteriore V11 | Rear brake disc V11 bushing |
| **15** | AFN.01677 | Rondella disco freno elastica V11 | Rear brake disc elastic washer V11 |
| **16** | AFN.00231 | Seeger Ø8 disco freno | Circlip Ø8 brake disc |
| **17** | AFS.00232 | Spina elastica Ø10 disco freno | Elastic pin Ø10 brake disc |
| **18** | FK0.01660 | Bussola disco freno posteriore V11 compl. | Rear brake disc V11 bush complete |
| **19** | FL1.04224 | Disco freno posteriore V11 Ø192 STD | Rear brake disc V11 Ø192 STD |
| **20** | FAG.05004 | Piastra supporto pinza V11 Ø192 oro | Caliper support V11 Ø192 gold |
| | FAN.05004 | Piastra supporto pinza V11 Ø192 nero | Caliper support V11 Ø192 black |
| OPZ. **A** | FK0.04542 | Kit trasformazione V11 da Ø192>Ø180 | Trasformation kit V11 from Ø192>Ø180 |
| **21** | FM0.04299 | Mozzo disco posteriore 50 all. V11 no viti | Rear disc hub 50 aluminum V11 no screws |
| **22** | FL1.00373 | Disco freno posteriore V11 Ø180 | Rear brake disc V11 Ø180 |
| **23** | SBN.00372 | Bussola disco freno anteriore V11 | Front brake disc V11 bush |
| **24** | AFN.04517 | Rasamento 14 - 20x0,2 acciaio | Iron washer 14 - 20x0,2 |
| **25** | AFN.00230 | Rondella disco freno elastica | Rear brake disc elastic washer |
| **26** | AFN.00231 | Seeger Ø8 disco freno | Circlip Ø8 brake disc |
| **27** | AFS.00232 | Spina elastica Ø10 disco freno | Elastic pin Ø10 brake disc |
| **28** | FK0.00372 | Bussola disco freno ant. V11 completo | Front brake disc V11 bush complete |
| **29** | FZ0.04331 | Piastra supporto pinza V11 Ø180 | Rear brake caliper plate V11 Ø180 |
| **30** | FAN.01462 | Spessore pinza 8,5x18x21 ibrido | Caliper spacer black 8,5x18x21 hybrid |
| **31** | AFS.04205 | Pastiglia freno post. V11 14,5 mm rossa | Rear brake pad V11 14,5 mm red |
| **32** | AFS.01745 | Pastiglia freno posteriore V11 rossa | Rear brake pad V11 red |
| **33** | AFS.04916 | Pastiglia freno posteriore V11 nera | Rear brake pad V11 black |

# KZ IMPIANTO FRENANTE V11 ORO / NERO - V11 BRAKE SYSTEM GOLD / BLACK

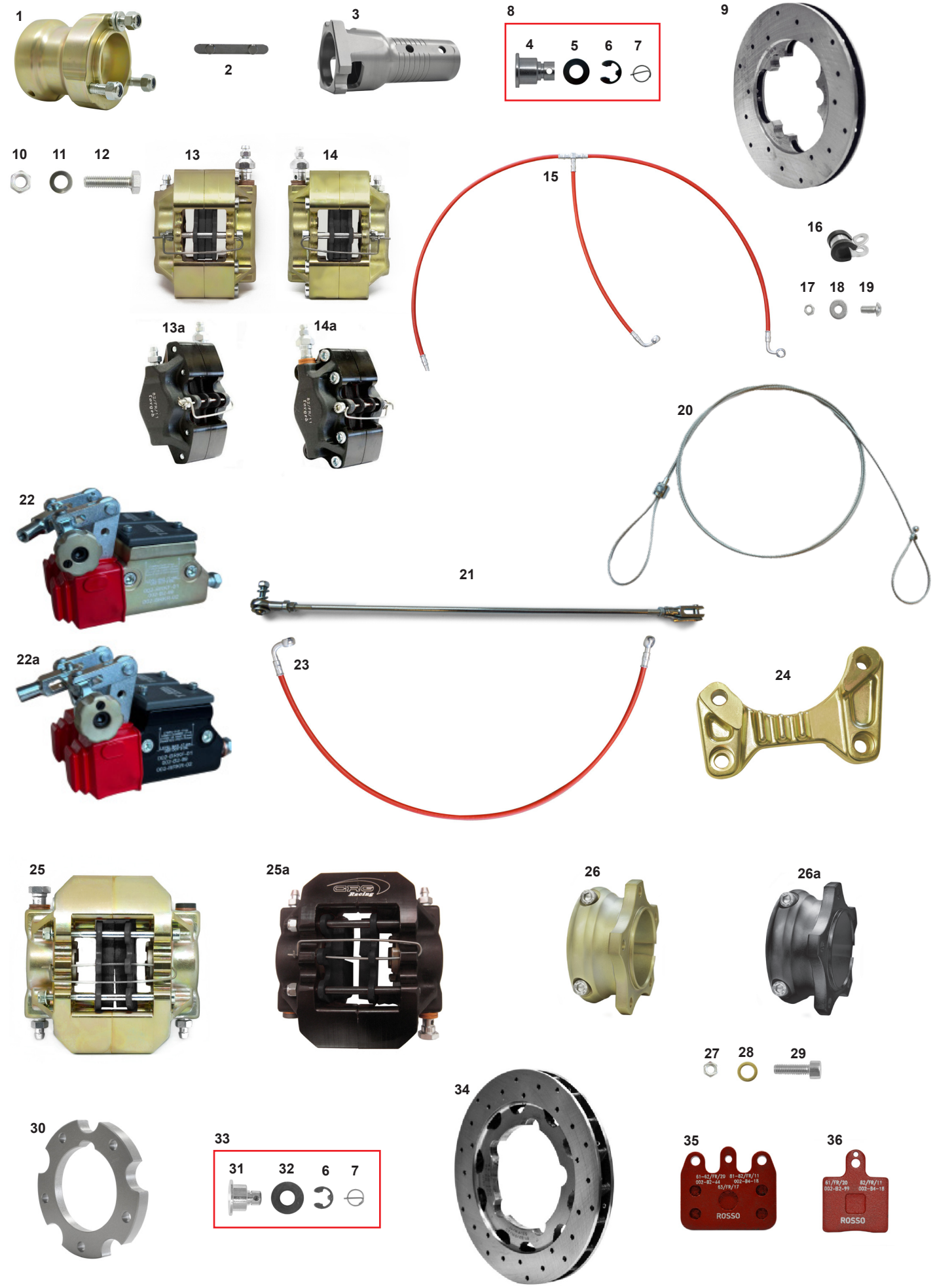

| ES | COD. | DESCRIZIONE | DESCRIPTION |
|---|---|---|---|
| | MONT.T01V.Oro | Impianto frenante KZ V11 192 oro | Brake system KZ V11 192 gold |
| | MONT.T01V.Nero | Impianto frenante KZ V11 192 MG nero | Brake system KZ V11 192 black |
| **1** | AFS.05687 | Mozzo anteriore KZ 40x80mm R2.0 MG | Magnesium front hub KZ 40x80 R2.0 |
| **2** | AFS.00246 | Chiavetta assale 2 pioli | Rear axle keyway 2 pins |
| **3** | FMN.01893 | Mozzo disco ant. all. V11 KZ 25 completo | Alu. front brake disc hub V11 KZ 25 complete |
| **4** | SBN.00372 | Bussola disco freno anteriore V11 | Front brake disc V11 bush |
| **5** | AFN.00230 | Rondella disco freno elastica | Rear brake disc elastic washer |
| **6** | AFN.00231 | Seeger D8 disco freno | Circlip D8 brake disc |
| **7** | AFS.00232 | Spina elastica D10 disco freno | Elastic pin D10 brake disc |
| **8** | FK0.00372 | Bussola disco freno ant. V11 completo | Front brake disc V11 bush complete |
| **9** | FL1.04225 | Disco freno anteriore V11 154 std | Brake disc front V11 154 std |
| **10** | AFN.00286 | Dado M8 metalblock | Nut M8 metalblock |
| **11** | AFN.00047 | Rondella 8 ondulata | Undulated washer 8 |
| **11** | AFN.00107 | Vite M 8x25 esagonale | M 8x25 hexagonal head screw |
| **12** | AFN.00827 | Vite M 8x30 cilindrica | M 8x30 socket head screw |
| **13** | FMG.4961S | Pinza ant.V11 nera G sx oro compl. | Front brake cal. V11 bl. G L. gold compl. |
| **14** | FMG.4961D | Pinza ant.V11 nera G dx oro compl. | Front brake cal. V11 bl. G L. gold compl. |
| **13a** | FMN.4961S | Pinza ant.V11 nera G sx nero compl. | Front brake cal. V11 bl. G L. black compl. |
| **14a** | FMN.4961D | Pinza ant.V11 nera G dx nero compl. | Front brake cal. V11 bl. G L. black compl. |
| **15** | AFS.00336 | Tubo freno tris anteriore V11 occhiello | Front brake hose tris V11 eyelet |
| **16** | AFN.03912 | Fascetta ferma tubo freno D6 | Brake tube clip D6 |
| **17** | AFN.00360 | Dado M 5 autoblock basso | Nut M 5 low self-locking |
| **18** | AFN.00361 | Rondella 5,5-15x1,5 | Washer 5,5-15x1,5 |
| **19** | AFN.00359 | Vite M 5x12 bombata | M 5x12 convex head screw |
| **20** | FK0.06422 | Cavo freno montato KZ per ped. forgiato | Safety cable assy KZ for forg. pedal |
| **21** | FK0.06448 | Asta freno montata cm.42 per ped. forgiato | Brake rod assy cm.42 for forg. pedal |
| **22** | FMG.00329 | Doppia pompa V11 + rip. KZ oro | Double master cylinder V11 with equal. gold |
| **22a** | FM0.00329 | Doppia pompa V11 + rip. KZ | Double master cylinder V11 with equal. |
| **23** | AFS.00240 | Tubo freno mm 720 V11 post occhiello | Brake tube V11 rear eyelet mm 720 |
| **24** | FAG.05004 | Piastra supp. pinza post. V11 Ø192 oro | Rear caliper support V11 Ø192 black G gold |
| **25** | FMG.04962 | Pinza freno post. V11 nera G oro | Rear brake caliper V11 black G gold |
| **25a** | FMN.04962 | Pinza freno post. V11 nera G nero | Rear brake caliper V11 black G black |
| **26** | FMG.06224 | Mozzo disco post all. 50 R2.1 oro compl. | Rear disc hub alu. 50 R2.1 gold complete |
| **26a** | FMN.06224 | Mozzo disco post all. 50 R2.1 nero compl. | Rear disc hub alu. 50 R2.1 black complete |
| **27** | AFN.00234 | Dado M 6 metalblock | Nut M 6 metalblock |
| **28** | AFN.06156 | Rondella 6,5-10x1 acciaio inox | Washer 6,5-10x1 inox |
| **29** | AFN.00183 | Vite M 6x20 cilindrica | M 6x20 socket head screw |
| **30** | SAN.01592 | Flangia disco posteriore V11 | Rear brake disc flange V11 |
| **31** | SBN.01660 | Bussola disco freno posteriore V11 | Rear brake disc V11 bushing |
| **32** | AFN.01677 | Rondella disco freno elastica V11 post. | Rear brake disc V11 elastic washer |
| **33** | FK0.01660 | Bussola disco freno post. V11 completo | Rear brake disc V11 bush complete |
| **34** | FL1.04224 | Disco freno posteriore V11 192 STD | Rear brake disc V11 192 STD |
| | AFS.01727 | Disco freno posteriore V11 194 (Margherita) | Rear brake disc V11 194 (Wave) |
| | AFS.03281 | Disco freno post.V11 189 STD (Margherita) | Rear brake disc V11 189 STD (Wave) |
| **35** | AFS.01745 | Pastiglia freno posteriore V11 rossa | Rear brake pad V11 red |
| **36** | AFS.02997 | Pastiglia freno anteriore V11 rossa | Front brake pad V11 red |

A

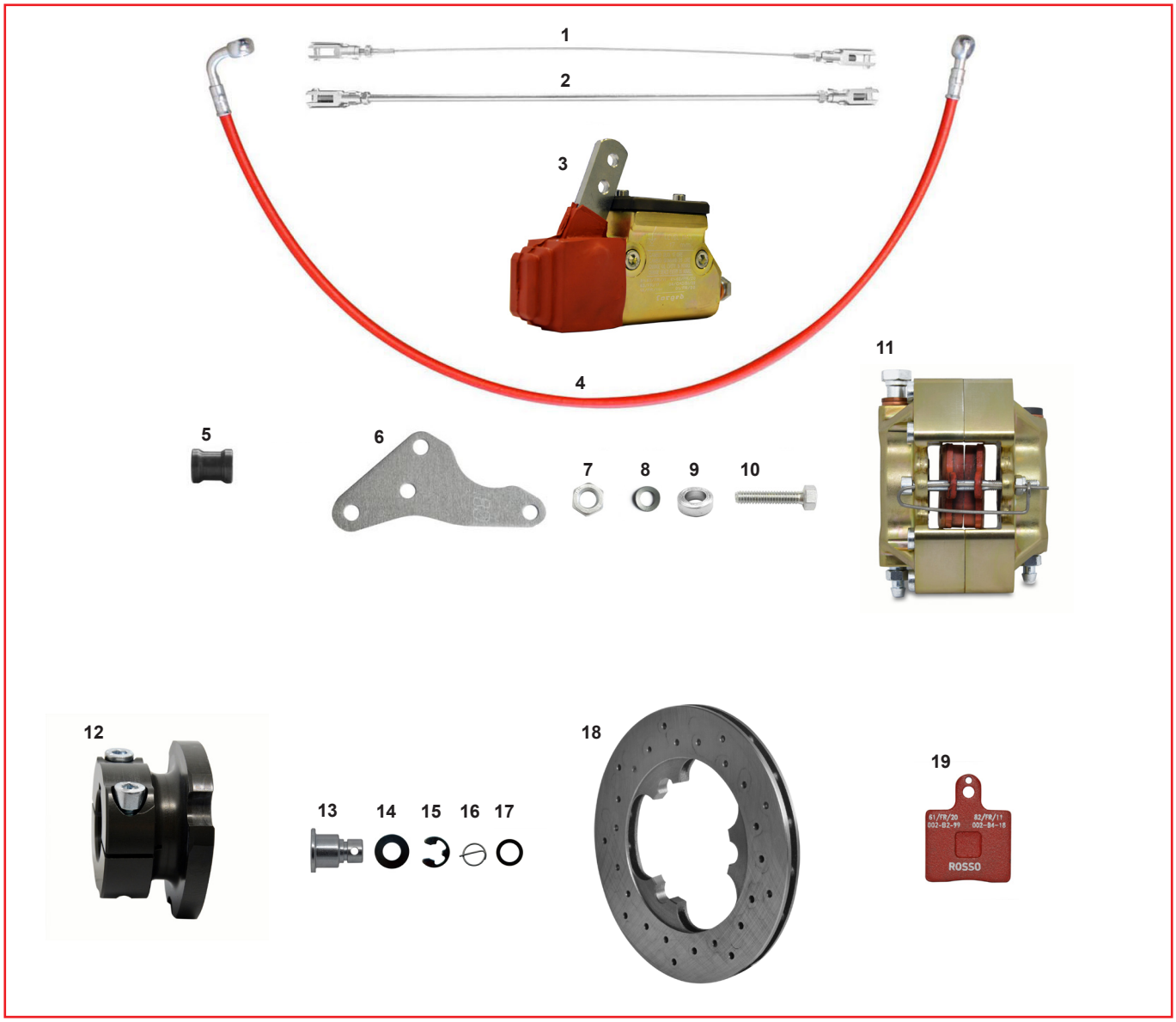


| ES | COD. | DESCRIZIONE | DESCRIPTION |
|---|---|---|---|
| **A** | CRG.00363 | Impianto mini cadet completo oro | Mini new age brake system complete gold |
| **1** | FK0.00808 | Cavo freno completo cm.33 mini | Safety cable complete cm.33 mini |
| **2** | FK0.00704 | Asta freno montata cm.33 mini | Brake rod complete cm.33 mini |
| **3** | FMG.00192 | Pompa freni V11 completa oro | Master cylinder V11 complete gold |
| **4** | AFS.05181 | Tubo freno occhiello mm 635 rosso mini | Eyelet brake tube mm 635 red mini |
| **5** | FAN.01462 | Spessore pinza 8,5x18x21 ibrido nero | Caliper spacer black 8,5x18x21 hybrid |
| **6** | FC0.03294 | Piastra supporto pinza mini | Brake caliper support mini |
| **7** | AFN.00286 | Dado M8 metalblock | Nut M8 metalblock |
| **8** | AFN.00047 | Rondella 8 ondulata | Undulated washer 8 |
| **9** | FBN.00252 | Spessore 8,5-14x 5 barretta | Spacer 8,5-14x 5 track rod |
| **10** | AFN.00307 | Vite M 8x30 esagonale | M 8x30 hexagonal head screw |
| **11** | FMG.00366 | Pinza freno mini cadet oro | Brake caliper mini cadet gold |
| **12** | FM0.04490 | Mozzo disco posteriore all. 30 UP compl. | Rear brake disc hub UP 30 complete alu. |
| **13** | SBN.00314 | Bussola disco freno mini | Mini brake disc bush |
| **14** | AFN.00230 | Rondella disco freno elastica | Brake disc elastic washer |
| **15** | AFN.00231 | Seeger Ø8 disco freno | Circlip Ø8 brake disc |
| **16** | AFS.00232 | Spina elastica Ø10 disco freno | Brake disc elastic pin Ø10 |
| **17** | AFN.04517 | Rasamento 14-20x0,2 acciaio | Iron washer 14-20x0,2 |
| **18** | FL1.00373 | Disco freno posteriore V11 Ø180 | Rear brake disc UP V11 Ø180 |
| **19** | AFS.02997 | Pastiglia freno anteriore V11 rossa | Front brake pad V11 red |

# M IMPIANTO FRENO MINI 2.0 COMPLETO - 2.0 MINI BRAKE SYSTEM COMPLETE

A

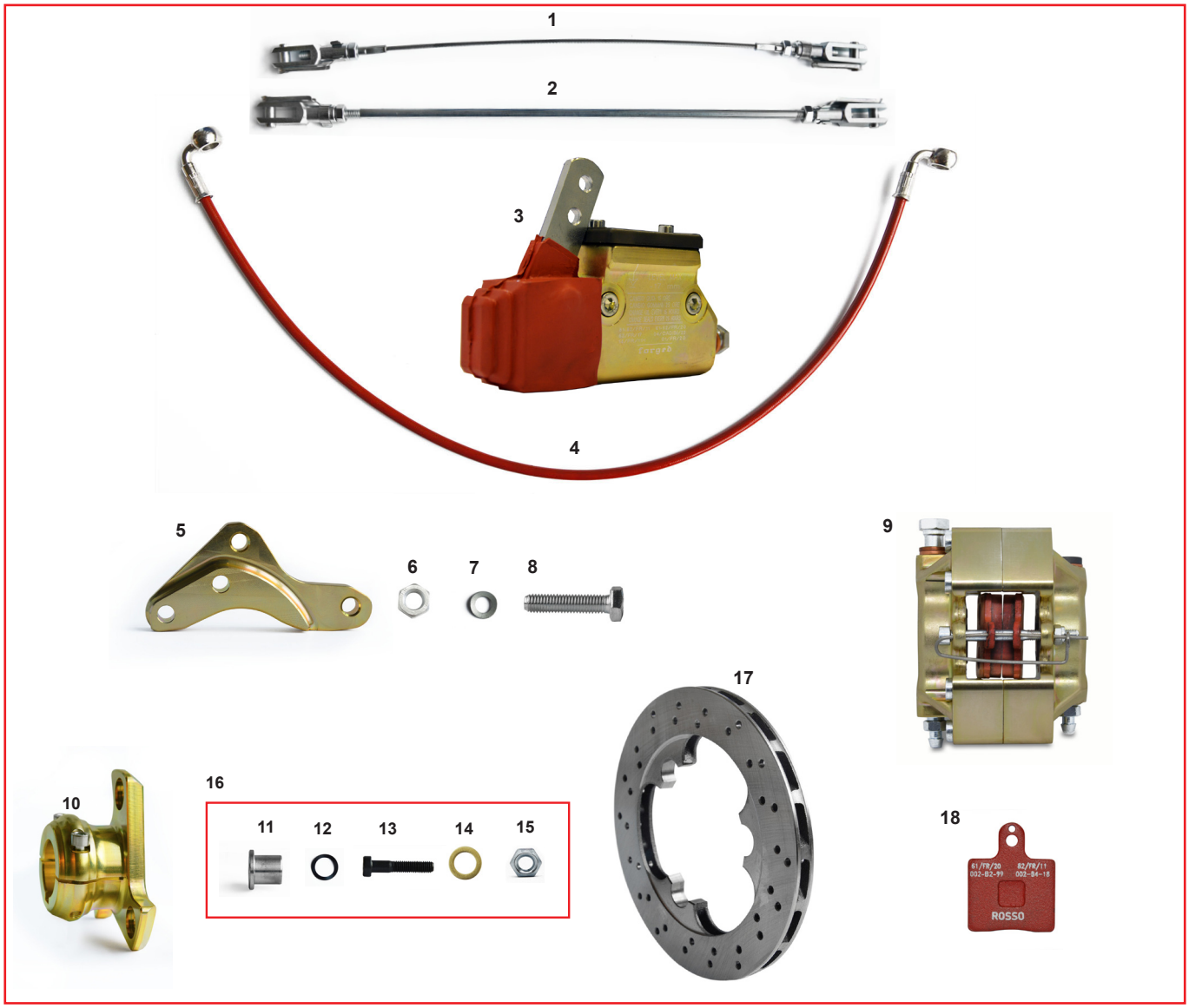


| ES | COD. | DESCRIZIONE | DESCRIPTION |
|---|---|---|---|
| **A** | CRG.02921 | Impianto mini completo oro | Mini brake system complete gold |
| **1** | FK0.00808 | Cavo freno completo cm.33 mini | Safety cable complete cm.33 mini |
| **2** | FK0.00704 | Asta freno montata cm.33 mini | Brake rod complete cm.33 mini |
| **3** | FMG.00192 | Pompa freni V11 completa oro | Rear master cylinder V11 complete gold |
| | FM0.00192 | Pompa freni V11 completa nera | Rear master cylinder V11 complete black |
| **4** | AFS.05181 | Tubo freno occhiello mm635 rosso mini | Eyelet brake tube mm635 red mini |
| **5** | SAG.05076 | Supporto pinza mini alluminio Ø165 oro | Brake caliper support mini alu. Ø165 gold |
| **6** | AFN.00286 | Dado M 8 metalblock | Nut M 8 metalblock |
| **7** | AFN.00047 | Rondella 8 ondulata | Undulated washer 8 |
| **8** | AFN.00349 | Vite M 8x35 esagonale | M 8x35 hexagonal head screw |
| **9** | FMG.00366 | Pinza freno Mini cadet oro | Brake caliper mini cadet gold |
| | FM0.00366 | Pinza freno Mini cadet nera | Brake caliper mini cadet black |
| **10** | FMG.05078 | Mozzo disco post. all. 30 Mini compl. oro | Rear brake disc hub alu. 30 mini compl. gold |
| | FMN.05078 | Mozzo disco post. all. 30 Mini compl. nero | Rear brake disc hub alu. 30 mini compl. black |
| **11** | SZ0.05077 | Bussola disco freno vs2.0 Ø17 | Rear brake disc bush vs2.0 Ø17 |
| **12** | AFN.05075 | Rondella 17-24x0.3 ondulata per disco | Undulated washer 17-24x0.3 for brake disc |
| **13** | AFN.05194 | Vite M 6x30 cilindrica testa bassa | Socket head screw 6x30 low |
| **14** | AFN.06156 | Rondella 6,5-10x1 acciaio inox | Washer 6,5-10x1 inox |
| **15** | AFN.00234 | Dado M6 metalblock | Nut M6 metalblocK |
| **16** | FK0.05077 | Bussola disco freno mini Ø17 completa | Rear brake disc bush Ø17 complete |
| **17** | FL1.05074 | Disco freno post. mini autov. Ø165x12 | Rear brake disc mini Ø165x12 self-ventilated |
| **18** | AFS.02997 | Pastiglia freno anteriore V05/09/11 rossa | Front brake pad V05/09/11 red |

# KZ PINZA POSTERIORE V11 - REAR BRAKE CALIPER V11

# DD PINZA POSTERIORE V11 - REAR BRAKE CALIPER V11

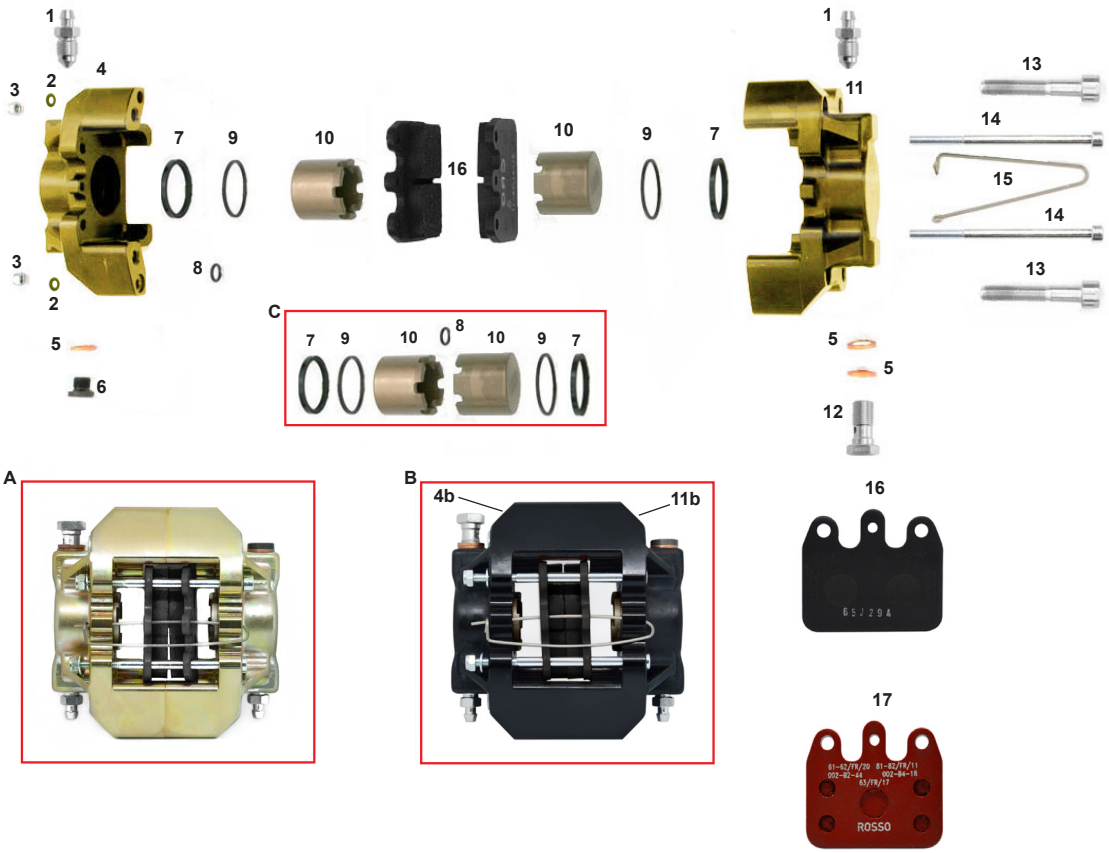


| ES | COD. | DESCRIZIONE | DESCRIPTION |
|---|---|---|---|
| **A** | FMG.04962 | Pinza freno post. V11 oro | Rear brake caliper V11 gold |
| **B** | FMN.04962 | Pinza freno post. V11 nero | Rear brake caliper V11 black |
| **C** | CRG.03022 | Kit revisione pinza posteriore V11 | Revision kit rear brake caliper V11 |
| **1** | SZ0.00184 | Spurgo M10 | Bleeder M10 |
| **2** | AFN.02264 | Rondella 5,3-10x1 | Washer 5,3-10x1 |
| **3** | AFN.00360 | Dado M5 autoblock basso | Nut M5 low self-locking |
| **4** | SAG.1800D | Semi pinza posteriore V11 30 dx oro | Half rear brake caliper V11 30 rh gold |
| **4b** | SAN.1800D | Semi pinza posteriore V11 30 dx black | Half rear brake caliper V11 30 rh black |
| **5** | AFN.00186 | Rondella 10,5-14x2 rame | Copper washer 10,5-14x2 |
| **6** | SBN.00369 | Tappo M10 V11 | Caliper cap M10 V09/10 |
| **7** | AFS.03022 | Gommino pinza posteriore V11 | Rear brake caliper seal V11 |
| **8** | AFN.00182 | Or pinza V11 | O-ring caliper V11 |
| **9** | AFS.03023 | Gommino parapolvere | Dust guard seal |
| **10** | SD1.01801 | Pistoncino pinza V11 posteriore | Rear brake caliper piston V11 |
| **11** | SAG.1800S | Semi pinza posteriore V11 30 sx oro | Half rear brake caliper V11 30 left gold |
| **11b** | SAN.1800S | Semi pinza posteriore V11 30 sx black | Half rear brake caliper V11 30 left black |
| **12** | SZ0.00185 | Raccordo M10 V11 | Fitting M10 V11 |
| **13** | AFN.00159 | Vite M 8x45 cilindrica | M 8x45 socket head screw |
| **14** | AFN.01679 | Vite M 5x80 cilindrica | M 5x80 socket head screw |
| **15** | AFS.01682 | Spina sicurezza pinza posteriore | Rear safety pin |
| **16** | AFS.04916 | Pastiglia freno posteriore V11 nera | Rear brake pad V11 black |
| **17** | AFS.01745 | Pastiglia freno posteriore V11 rossa | Rear brake pad V11 red |

# KZ PINZA ANTERIORE V11 - FRONT BRAKE CALIPER V11

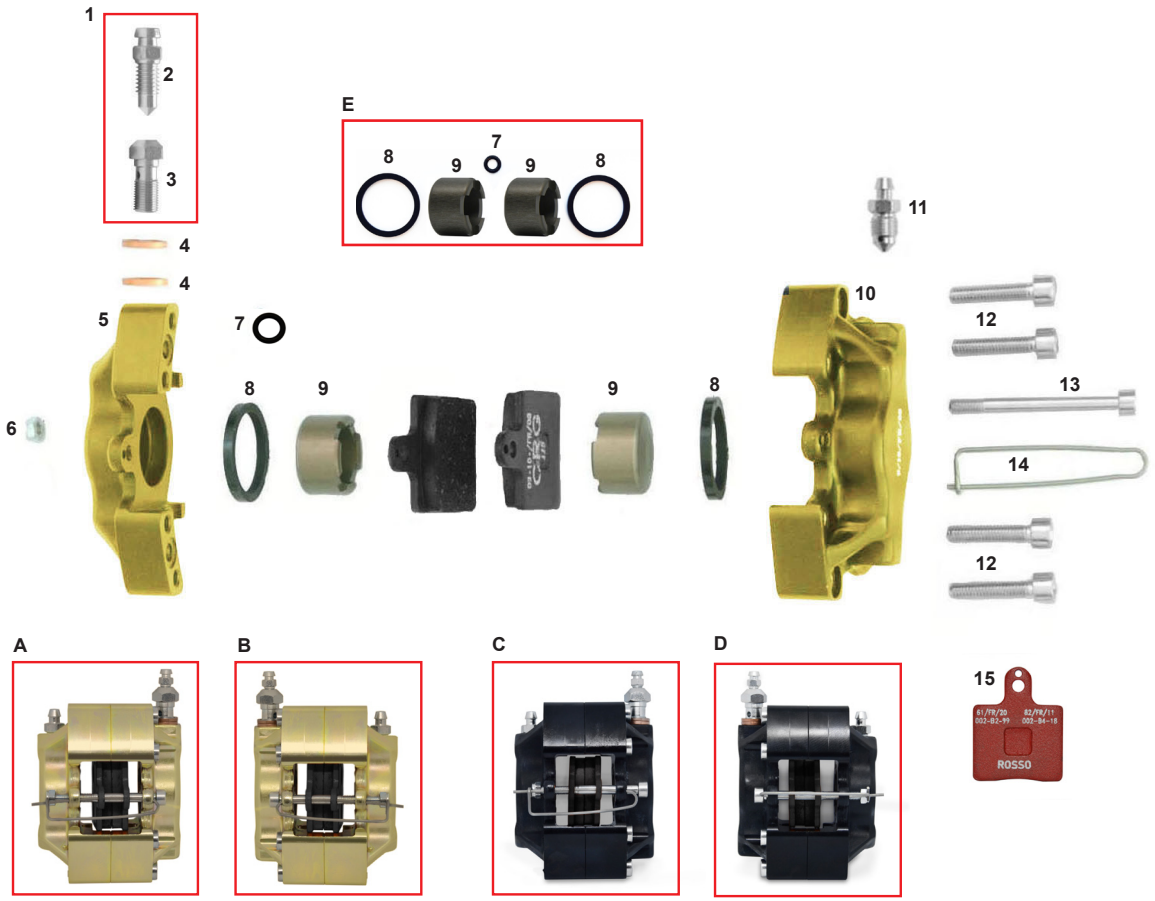


| ES | COD. | DESCRIZIONE | DESCRIPTION |
|---|---|---|---|
| **A** | FMG.4961S | Pinza ant. V11 nera G sx oro compl. | Front brake caliper V09/V11 black lh gold |
| **B** | FMG.4961D | Pinza ant. V11 nera G dx oro compl. | Front brake caliper V09/V11 black rh gold |
| **C** | FMN.4961S | Pinza ant. V11 nera G sx nera compl. | Front brake caliper V09/V11 black lh black |
| **D** | FMN.4961D | Pinza ant. V11 nera G dx nera compl. | Front brake caliper V09/V11 black rh black |
| **E** | CRG.03260 | Kit rev. pinza ant. V11 / Mini Cadet 2020 | Rev. kit front caliper V11 / Mini Cadet 2020 |
| **1** | FM0.00308 | Raccordo combinato completo | Bleeder fitting complete |
| **2** | SZ0.00309 | Spurgo M6 V11 | Bleeder M6 UP/V04/05 |
| **3** | SZ0.00308 | Raccordo combinato M10 | Combined fitting M10 |
| **4** | AFN.00186 | Rondella 10,5-14x2 rame | Copper washer 10,5-14x2 |
| **5** | SAG.0365D | Semi pinza ant. V11 con orecc. dx oro | Half caliper UP/V05 front w/bracket rh gold |
| **5** | SAG.0364D | Semi pinza ant. V11 dx oro | Half caliper UP/V05 front rh gold |
| | SDN.0365D | Semi pinza ant. V11 con orecc. dx nera | Half caliper UP/V05 front w/bracket rh black |
| | SDN.0364D | Semi pinza ant. V11 dx nera | Half caliper UP/V05 front rh black |
| **6** | AFN.00360 | Dado M5 autoblock basso | Nut M5 low self-locking |
| **7** | AFN.03814 | Or pinza V11 | O-ring caliper V09/10 |
| **8** | AFS.00179 | Gommino pinza anteriore V11 | Piston seal front UP/V05 |
| **9** | SD1.00370 | Pistoncino pinza V11 anteriore oro | Front brake caliper piston V05/08 |
| **10** | SAG.0365S | Semi pinza ant. V11 con orecc. sx oro | Half caliper UP/V05 front lh gold |
| **10** | SAG.0364S | Semi pinza ant. V11 sx oro | Half caliper UP/V05 front lh gold |
| | SDN.0365S | Semi pinza ant. V11 con orecc. sx nera | Half caliper UP/V05 front w/bracket lh black |
| | SDN.0364S | Semi pinza ant. V11 sx nera | Half caliper UP/V05 front lh black |
| **11** | SZ0.00184 | Spurgo M10 V11 | Bleeder M10 UP/V04 |
| **12** | AFN.00368 | Vite M 6x40 cilindrica | M 6x40 socket head screw |
| **13** | AFN.00367 | Vite M 5x55 cilindrica | M 5x55 socket head screw |
| **14** | AFS.00187 | Spina sicurezza anteriore V11 | Safety pin V09/10 front |
| **15** | AFS.02997 | Pastiglia freno anteriore V05/09/11 rossa | Front brake pad V05/09/11 red |

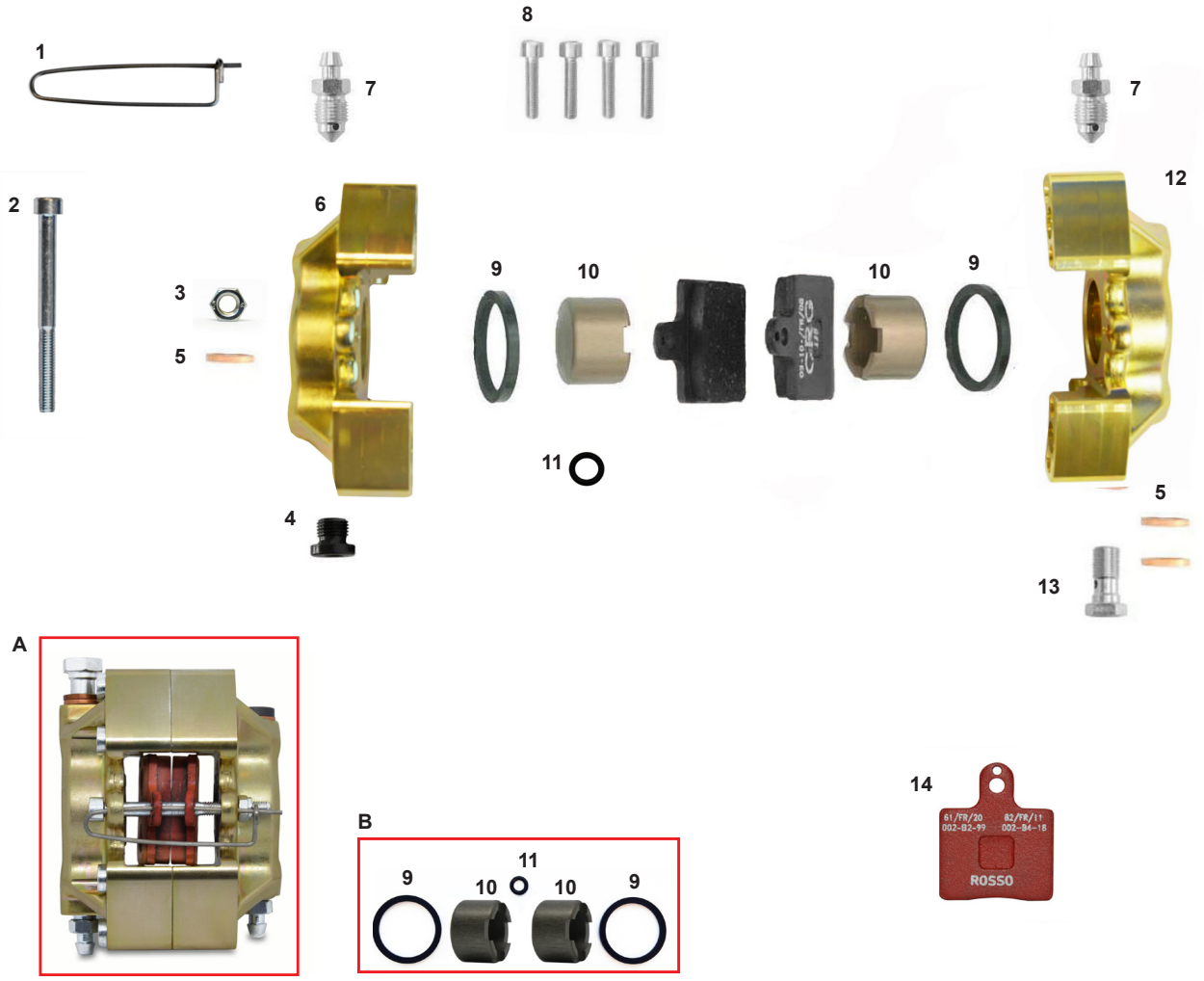


| ES | COD. | DESCRIZIONE | DESCRIPTION |
|---|---|---|---|
| **A** | FMG.00366 | Pinza freno Mini cadet oro completa | Brake caliper Mini cadet gold |
| | FM0.00366 | Pinza freno Mini cadet nera completa | Brake caliper Mini cadet black |
| **B** | CRG.03260 | Kit revisione pinza anteriore V11 | Revision kit front brake caliper V11 |
| **1** | AFS.00187 | Spina sicurezza anteriore V11 | Front safety pin V11 |
| **2** | AFN.00367 | Vite M5x55 cilindrica | M5x55 socket head screw |
| **3** | AFN.00360 | Dado M5 autoblock basso | Nut M5 low self-locking |
| **4** | SBN.00369 | Tappo M10 V11 | Caliper cap M10 V11 |
| **5** | AFN.00186 | Rondella 10,5-14x2 rame | Copper washer 10,5-14x2 |
| **6** | SAG.0366S | Semi pinza Cadet con orecchiette oro sx | Half brake caliper Cadet lh gold with fittings |
| | SAN.0366S | Semi pinza Cadet con orecchiette nero sx | Half brake caliper Cadet lf black with fittings |
| **7** | SZ0.00184 | Spurgo M10 V11 | Bleeder M10 V11 |
| **8** | AFN.00368 | Vite M6x40 cilindrica | M6x40 socket head screw |
| **9** | AFS.00179 | Gommino pinza anteriore V11 | Piston seal front V11 |
| **10** | SD1.00370 | Pistoncino pinza V11 anteriore | Front brake piston V11 |
| **11** | AFN.03814 | Or pinza V11 | O-ring caliper V11 |
| **12** | SAG.0366D | Semi pinza cadet senza orecchiette oro dx | Half brake caliper cadet rh gold |
| | SAN.0366D | Semi pinza cadet senza orecchiette nero dx | Half brake caliper cadet rh black |
| **13** | SZ0.00185 | Raccordo M10 V11 | Fitting M10 V11 |
| **14** | AFS.02997 | Pastiglia freno anteriore V11 rossa | Front brake pad V11 red |

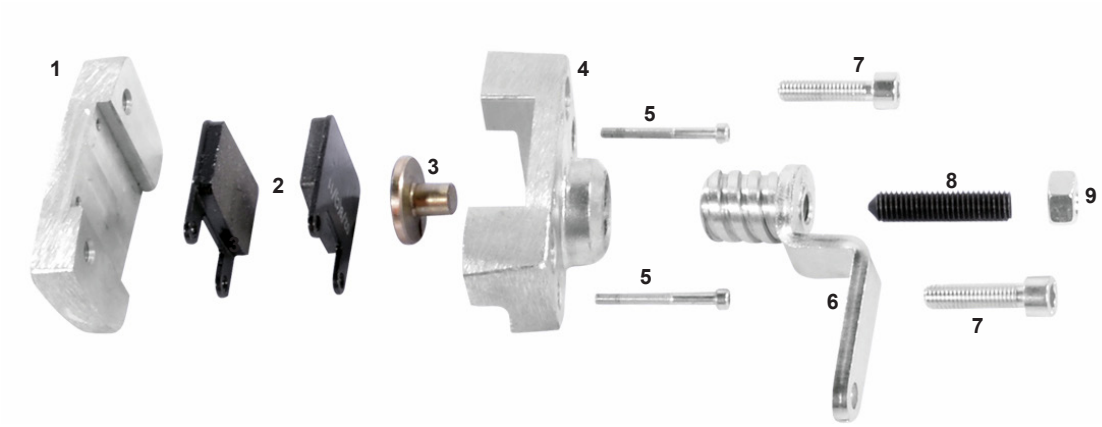


A

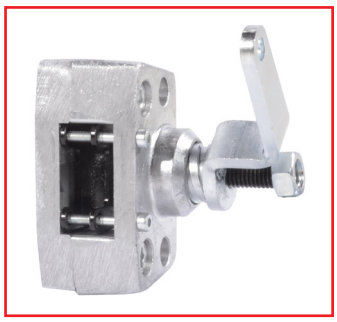

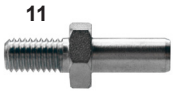


| ES | COD. | DESCRIZIONE | DESCRIPTION |
|---|---|---|---|
| **A** | FM0.00458 | Pinza freno Puffo completa | Brake caliper Puffo complete |
| **1** | SL1.0538S | Semi pinza Puffo sinistra | Half caliper Puffo left |
| **2** | AFS.00438 | Pastiglia freno Puffo | Brake pad Puffo |
| **3** | SZ0.00454 | Pistoncino pinza Puffo | Piston Puffo caliper |
| **4** | SL1.0538D | Semi pinza Puffo destra | Half caliper Puffo right |
| **5** | AFN.00494 | Vite M 3x30 cilindrica | M 3x30 socket head screw |
| **6** | SBN.00467 | Svitone pinza Puffo | Puffo brake caliper unscrew |
| **7** | AFN.00478 | Vite M 6x25 cilindrica | M 6x25 socket head screw |
| **8** | AFN.00498 | Grano M8x35 pinza Puffo | Grub screw M8x35 Puffo caliper |
| **9** | AFN.0049D | Dado M8 | Nut M8 |
| **10** | FZ0.00517 | Molla pinza freno Puffo | Puffo brake caliper spring |
| **11** | FBN.01086 | Perno pinza Puffo | Caliper pivot Puffo |

## DD POMPA FRENI ABA V13 - ABA MASTER CYLINDER V13

## KZ POMPA FRENI ABA V13 - ABA MASTER CYLINDER V13







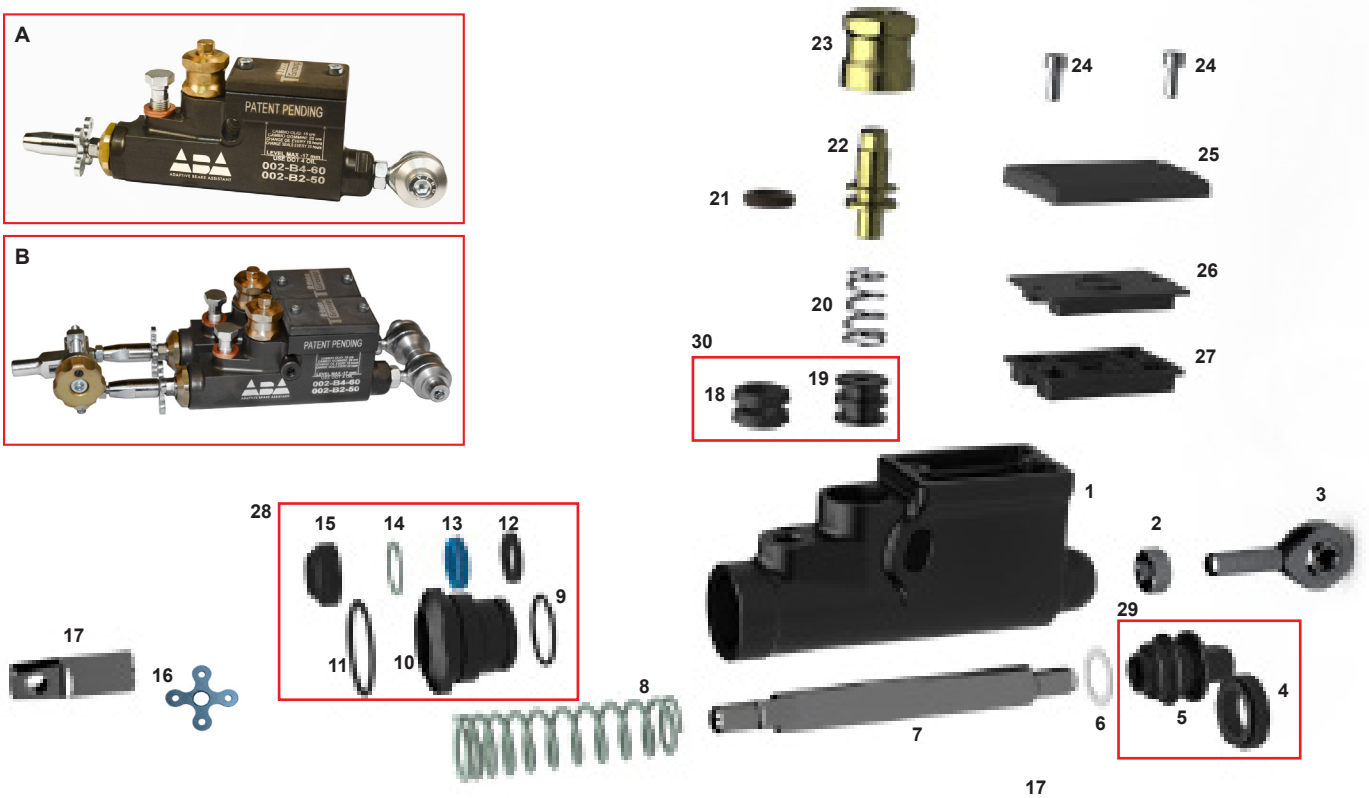


| ES | COD. | DESCRIZIONE | DESCRIPTION |
|---|---|---|---|
| **A** | FM0.05362 | Pompa freni ABA OK completa | ABA master cylinder complete OK |
| **B** | FM0.05961 | Pompa freni ABA KZ completa | ABA master cylinder complete KZ |
| **1** | SAN.05362 | Corpo pompa freno ABA | Master cylinder body ABA |
| **2** | AFN.0049D | Dado M8 | Nut M8 |
| **3** | AFS.5702D | Uniball sterzo destro senza dado | Uniball right steering without nut |
| **4** | AFS.00194 | Gommino pompa freno Ø22 | Master cylinder rubber Ø22 |
| **5** | SDN.05784 | Pistone pompa freno ABA | Brake pump piston ABA |
| **6** | A98.1610000 | Rasamento molla pompa ABA | Spring shim ABA master cylinder |
| **7** | SL1.05783 | Tirante pompa freno ABA | Tie rod brake master cylinder ABA |
| **8** | AML.05740 | Molla pompa freno ABA sp. 2,0mm | Spring brake master cylinder ABA 2,0mm |
| **9** | AFN.06057 | O-ring inf. tappo pompa freno Ø1,78x18,77 | Master cylinder lower cap O-ring Ø1,78x18,77 |
| **10** | SL1.05363 | Tappo frontale pompa freno ABA | Master cylinder front cap ABA |
| **11** | AFN.05994 | O-ring superiore tappo pompa freno ABA | ABA master cylinder upper cap O-ring |
| **12** | AFN.05872 | Quad ring pompa freno ABA Ø11,7x2,62 | ABA master cylinder quad ring Ø11,7x2,62 |
| **13** | AFS.05892 | Paraolio u-cap ABA | ABA oil seal u-cap |
| **14** | AFN.05879 | Seeger interno tipo JV Ø17 | Internal circlip JV Ø17 |
| **15** | AFS.06063 | Gommino parapolvere ABA Ø12x16x3 | ABA rubber dust seal Ø12x16x3 |
| **16** | SZ0.05810 | Quadrifoglio spina sicurezza | Four leaf clover safety pin |
| **17** | SC0.05805 | Adattatore Sicurezza M8-M6 | Safety adapter M8-M6 |
| **18** | AFN.05778 | Paraolio compensatore pompa ABA | Pump compensator oil seal ABA |
| **19** | SDN.05779 | Pistoncino compensatore | Expansion tank piston |
| **20** | AML.05800 | Molla compensatore | Compensator spring |
| **21** | AFN.05837 | O-ring per vite registro compensatore ABA | ABA compensator screw O-ring |
| **22** | SL1.05780 | Vite ottone regolazione compensatore | Expansion tank adjuster |
| **23** | SL1.05781 | Tappo compensatore | Compensator cap |
| **24** | AFN.02148 | Vite M4x10 cilindrica | M4x10 socket head screw |
| **25** | SAN.00212 | Coperchio pompa freno UP | UP brake pump cover |
| **26** | AFS.00204 | Tappo membrana pompa | Diaphram pump cap |
| **27** | AFS.00205 | Membrana pompa V09/10 | V09/10 master cylinder gasket |
| **28** | FM0.05363 | Tappo pompa freno | Master cylinder cap |
| **29** | FM0.05784 | Pistone pompa freno | Master cylinder piston |
| | FM0.05779 | Pistoncino compensatore completo | Complete compensating piston |

| | |
|---|---|
| M | POMPA FRENI MINI- MINI MASTER CYLINDER |
| FS4 | POMPA FRENI FS4 - FS4 MASTER CYLINDER |
| KZ | POMPA FRENI V11 - V11 MASTER CYLINDER |
| DD | POMPA FRENI V11 - V11 MASTER CYLINDER |

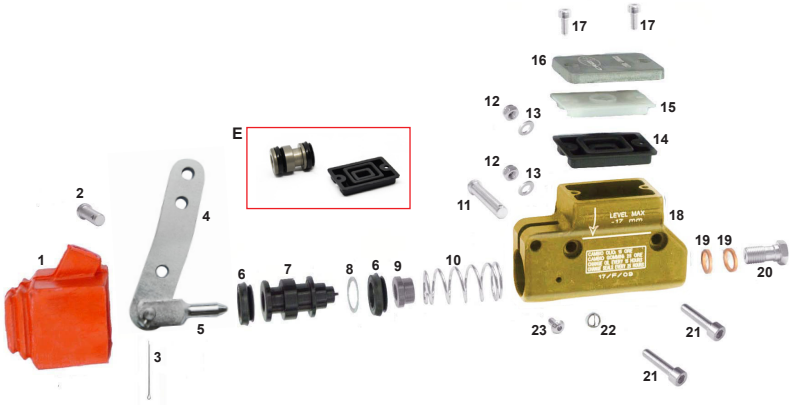


A

B 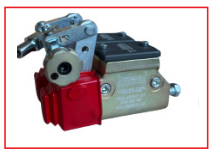

C

D 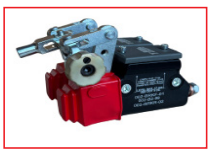

| ES | COD. | DESCRIZIONE | DESCRIPTION |
|---|---|---|---|
| **A** | FMG.00192 | Pompa freni V11 compl. oro FS4 Mini | Rear master cylinder V11 gold compl. FS4 Mini |
| | FMG.05591 | Pompa freni V11 compl. oro OK-OKJ | Rear master cylinder V11 gold compl. OK-OKJ |
| **B** | FMG.00329 | Doppia pompa V11 + rip. KZ oro | Double master cylinder V11 + equal. KZ gold |
| **C** | FM0.00192 | Pompa freni V11 compl. nera KZ FS4 Mini | Master cylinder V11 compl. KZ FS4 Mini black |
| | FM0.05591 | Pompa freni V11 compl. nera OK-OKJ | Master cylinder V11 compl. black OK-OKJ |
| **D** | FM0.00329 | Doppia pompa V11 con rip. KZ | Double master cyl. V11 KZ with equilizer |
| **E** | CRG.00192 | Kit revisione pompa freno V11 | Revision kit master cylinder V11 |
| **1** | AFS.00199 | Copripolvere pompa freni | Dust cover for brake pump |
| **2** | SBN.00200 | Spina pompa freni 16mm nera | Master cylinder pin 16mm black |
| | SBN.00214 | Spina ripartitore mm17,5 | Divider pin 17,5mm |
| **3** | AFN.00201 | Copiglia | Master cylinder split pin |
| **4** | SZ0.05147 | Leva pompa freno posteriore Sp.6 | Rear master cylinder lever SP.6 |
| **5** | AFS.04974 | Puntale pompa freni sp.6 | Toe brakes pump sp.6 |
| | AFS.04975 | Forchetta doppia sp. 5/6 | Double fork sp. 5/6 |
| **6** | AFS.00194 | Gommino pompa V11 | Master cylinder rubber V11 |
| **7** | SAN.00210 | Pistoncino pompa V11 | Master cylinder piston V11 |
| **8** | AFN.00195 | Distanziale pompa freni 14-20x0,5 | Master cylinder spacer 14-20x0,5 |
| **9** | SL1.00208 | Tappo molla pompa V11 | Master cylinder spring cap V11 |
| **10** | AML.00193 | Molla pompa freni V11 | Master cylinder spring V11 |
| | AML.05591 | Molla pompa freni cilindrica SP. 2,5 | Master cylinder spring cylindrical SP. 2,5 |
| **11** | SBN.00202 | Spina pompa freni 35,5mm | Brake master cylinder pin 35,5mm |
| **12** | AFN.00106 | Dado M6 autoblock basso | Nut M6 low self-locking |
| **13** | AFN.00105 | Rondella 6,5-12x1,5 | Washer 6,5-12x1,5 |
| **14** | AFS.00205 | Membrana pompa V11 | V11 master cylinder gasket |
| **15** | AFS.00204 | Tappo membrana pompa | Diaphram pump cap |
| **16** | SAN.00212 | Coperchio pompa freno V11 nero | Brake master cylinder cover V11 black |
| **17** | AFN.02148 | Vite M4x10 cilindrica | M4x10 socket head screw |
| **18** | SAG.00192 | Corpo pompa freno V11 oro | Master cylinder V11 body gold |
| **18b** | SAN.00192 | Corpo pompa freno V11 nero | Master cylinder V11 body black |
| **19** | AFN.00186 | Rondella 10,5-14x2 rame | Copper washer 10,5-14x2 |
| **20** | SZ0.00185 | Raccordo M10 V11 | Fitting M10 V11 |
| **21** | AFN.00368 | Vite M6x40 cilindrica | M6x40 socket head screw |
| **22** | AFS.00981 | Spina elastica Ø8 | Elastic pin Ø8 |
| **23** | AFN.02262 | Vite M4x6 bombata | M4x6 convex head screw |

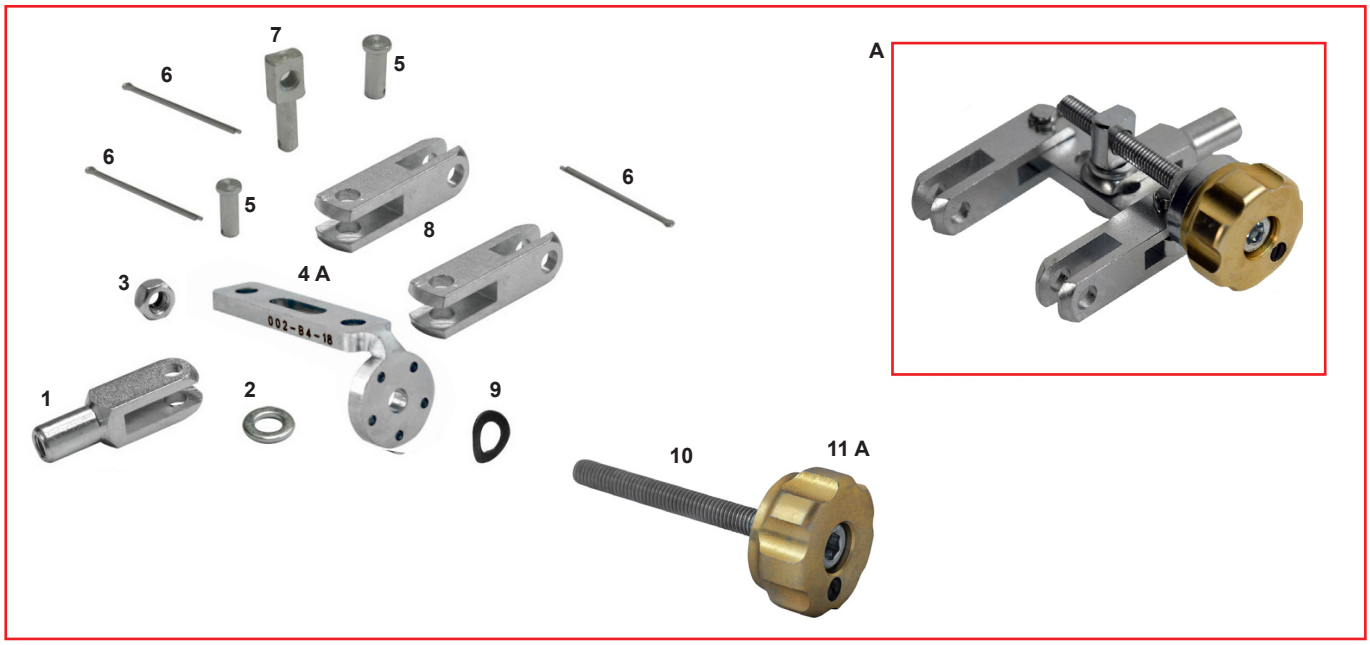


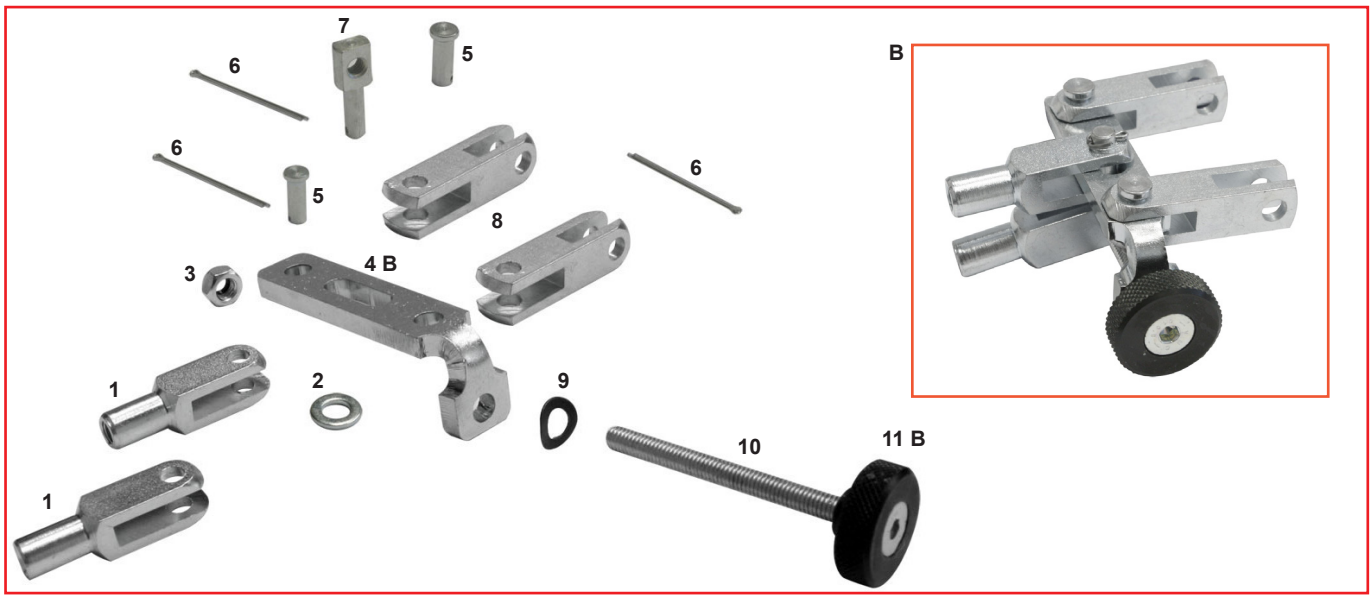


| ES | COD. | DESCRIZIONE | DESCRIPTION |
|---|---|---|---|
| **A** | FM0.05027 | Ripartitore frenata KZ con posizionatore | Brake equalizer KZ assy with positioner |
| **B** | FM0.00330 | Ripartitore frenata KZ completo | Brake equalizer KZ complete |
| **1** | AFS.00216 | Forchetta semplice standard | Simple fork standard |
| **2** | AFN.00105 | Rondella 6,5-12x1,5 | Washer 6,5-12x1,5 |
| **3** | AFN.00106 | Dado M 6 autoblock basso | Nut M 6 low self-locking |
| **4A** | SZ0.05027 | Piastrina ripartitore KZ con posizionatore | Master cylinder KZ equal. with positioner |
| **4B** | SBN.00334 | Piastrina ripartitore KZ | Master cylinder KZ equal. |
| **5** | SBN.00214 | Spina ripartitore 17,5mm | Divider pin 17,5mm |
| **6** | AFN.00201 | Copiglia | Master cylinder split pin |
| **7** | SBN.00335 | Perno registro ripartitore KZ | KZ distributor register pivot |
| **8** | AFS.04975 | Forchetta doppia sp 5/6 | Double fork sp 5/6 |
| **9** | AFN.00331 | Rondella 6 ondulata | Undulated washer 6 |
| **10** | AFN.05030 | Vite M6x60 cilindrica filetto intero | Cylindrical socket head screw M6x60 |
| **11A** | SAG.05028 | Pomolo registro rip. KZ con posizionatore | Divider register pommel KZ with positioner |
| 11A | FMG.05028 | Pomolo reg. rip. KZ posizionat. con grano | Divider register pommel KZ with grub screw |
| **11B** | SAN.00333 | Pomolo registro ripartitore nero | Divider register pommel black |

# TIRANTI FRENO - BRAKE RODS

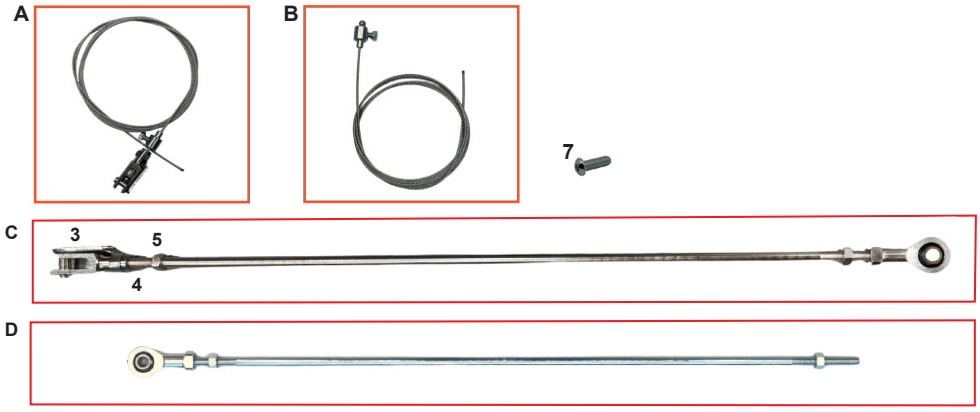


| ES | COD. | DESCRIZIONE | DESCRIPTION |
|---|---|---|---|
| **A** | FK0.06421 | Cavo freno montato OK per ped. forg. | Safety cable assy OK for forg. pedal |
| **B** | FK0.06422 | Cavo freno montato KZ per ped. forg. | Safety cable assy KZ for forg. pedal |
| **C** | FK0.06419 | Asta freno mont. OK cm.42 per ped.forg. | Brake rod assy cm.42 for forg. pedal |
| **D** | FK0.06448 | Asta freno monT. KZ cm.42 per ped.forg. | Brake rod assy cm.42 for forg. pedal |
| | FK0.03936 | Asta freno montata completa cm.39 FS4 | Brake rod complete cm.39 FS4 |
| | FK0.06448 | Asta freno montata cm.46 per ped. forg. | Brake rod assy cm.46 for forg. pedal |
| | FK0.06422 | Cavo freno montato KZ per ped. forg. | Safety cable assy KZ for forg. pedal |
| | FK0.06459 | Asta freno montata cm.45 per ped. forg. | Brake rod assy cm.45 for forg. pedal |
| **1** | SBN.01566 | Asta freno cm.24 | Brake rod cm.24 |
| **1** | SBN.00566 | Asta freno cm.28 | Brake rod cm.28 |
| **1** | SBN.01518 | Asta freno cm.30 | Brake rod cm.30 |
| **1** | SBN.00933 | Asta freno cm.32 | Brake rod cm.32 |
| **1** | SBN.00704 | Asta freno cm.33 | Brake rod cm.33 |
| **1** | SBN.00744 | Asta freno cm.38 | Brake rod cm.38 |
| **1** | SBN.03936 | Asta freno cm.39 | Brake rod cm.39 |
| **1** | SBN.00931 | Asta freno cm.40 | Brake rod cm.40 |
| **1** | SBN.00223 | Asta freno cm.42 | Brake rod cm.42 |
| **1** | SBN.00888 | Asta freno cm.43 | Brake rod cm.43 |
| **1** | SBN.00918 | Asta freno cm.45 | Brake rod cm.45 |
| **1** | SBN.00932 | Asta freno cm.46 | Brake rod cm.46 |
| **1** | SBN.00801 | Asta freno cm.48 | Brake rod cm.48 |
| **1** | SBN.00802 | Asta freno cm.49 | Brake rod cm.49 |
| **1** | SBN.01358 | Asta freno cm.52 | Brake rod cm.52 |
| **1** | SBN.00804 | Asta freno cm.55 | Brake rod cm.55 |
| **2** | AFS.00805 | Cavo sicurezza cm.25 | Safety cable cm.25 |
| **2** | AFS.00807 | Cavo sicurezza cm.29 | Safety cable cm.29 |
| **2** | AFS.00808 | Cavo sicurezza cm.33 | Safety cable cm.33 |
| **2** | AFS.00745 | Cavo sicurezza cm.39 | Safety cable cm.39 |
| **2** | AFS.00227 | Cavo sicurezza cm.41,5 | Safety cable cm.41,5 |
| **2** | AFS.00809 | Cavo sicurezza cm.44 | Safety cable cm.44 |
| **2** | AFS.05267 | Cavo sicurezza cm.46 | Safety cable cm.46 |
| **2** | AFS.06192 | Cavo sicurezza cm.48 | Safety cable cm.48 |
| **2** | AFS.00810 | Cavo sicurezza cm.48,5 | Safety cable cm.48,5 |
| **2** | AFS.00811 | Cavo sicurezza cm.52 | Safety cable cm.52 |
| **2** | AFS.00812 | Cavo sicurezza cm.54 | Safety cable cm.54 |
| **3** | AFS.00216 | Forchetta semplice standard | Simple fork standard |
| **3** | AFS.01190 | Forchetta semplice corta | Short fork simple |
| **4** | AFS.00224 | Clift std | Clift std |
| **5** | AFN.00093 | Dado M 6 | Nut M 6 |
| **6** | AFN.00234 | Dado M 6 autobloccante | Nut M 6 autoblock |
| **7** | AFN.02861 | Vite M6x18 bombata | M6x18 convex head screw |

1

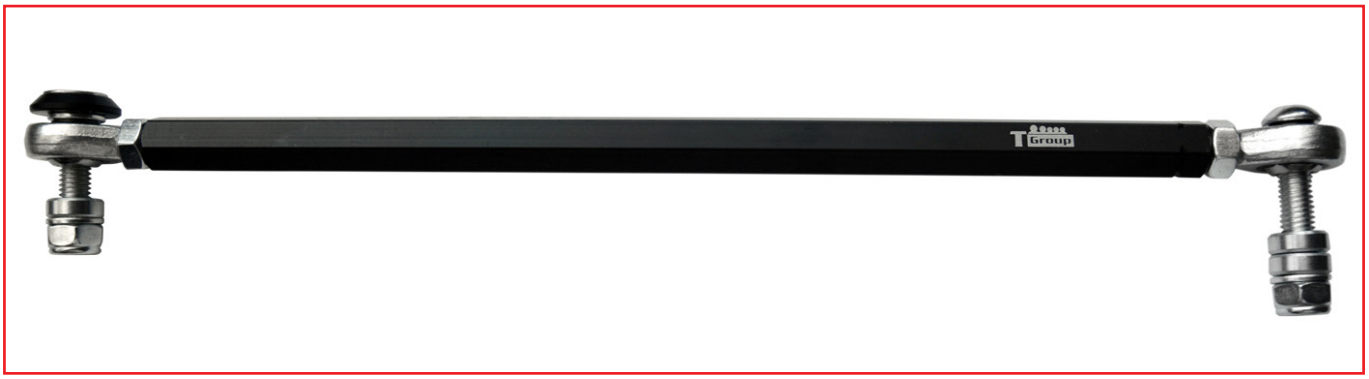

2

3

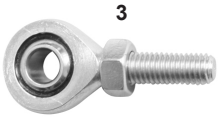

4

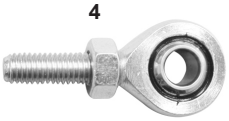

5

| ES | COD. | DESCRIZIONE | DESCRIPTION |
|---|---|---|---|
| 1 | FK0.00995 | Barretta esa CRG completa cm.22 | Hexagonal track rod CRG complete cm.22 |
| 1 | FK0.00822 | Barretta esa CRG completa cm.26 | Hexagonal track rod CRG complete cm.26 |
| 1 | FK0.00815 | Barretta esa CRG completa cm.26,5 | Hexagonal track rod CRG complete cm.26,5 |
| 1 | FK0.00612 | Barretta esa CRG completa cm.27 | Hexagonal track rod CRG complete cm.27 |
| 2 | FAN.01808 | Barretta esa cm.16,5 | Hexagonal track rod cm.16,5 |
| 2 | FAN.00718 | Barretta esa cm.19 | Hexagonal track rod cm.19 |
| 2 | FAN.00717 | Barretta esa cm.20 | Hexagonal track rod cm.20 |
| 2 | FAN.01441 | Barretta esa cm.21 | Hexagonal track rod cm.21 |
| 2 | FAN.00995 | Barretta esa cm.22 | Hexagonal track rod cm.22 |
| 2 | FAN.00546 | Barretta esa cm.23 | Hexagonal track rod cm.23 |
| 2 | FAN.00813 | Barretta esa cm.24 | Hexagonal track rod cm.24 |
| 2 | FAN.00814 | Barretta esa cm.25 | Hexagonal track rod cm.25 |
| 2 | FAN.00822 | Barretta esa cm.26 | Hexagonal track rod cm.26 |
| 2 | FAN.00815 | Barretta esa cm.26,5 | Hexagonal track rod cm.26,5 |
| 2 | FAN.00612 | Barretta esa cm.27 | Hexagonal track rod cm.27 |
| 2 | FAN.00816 | Barretta esa cm.27,5 | Hexagonal track rod cm.27,5 |
| 2 | FAN.00045 | Barretta esa cm.28 | Hexagonal track rod cm.28 |
| 2 | FAN.02027 | Barretta esa cm.28,5 | Hexagonal track rod cm.28,5 |
| 2 | FAN.02028 | Barretta esa cm.33 | Hexagonal track rod cm.33 |
| 3 | AFS.0047D | Uniball sterzo dx con dado | Ball joint rh with nut |
| 4 | AFS.0047S | Uniball sterzo sx con dado | Ball joint lf with nut |
| 5 | FBN.00252 | Spessore 8,5-14x5 barretta | Spacer 8,5-14x5 track rod |

# FUSELLO 10.25 CASTER NEW - STUB AXLE 10.25 CASTER NEW

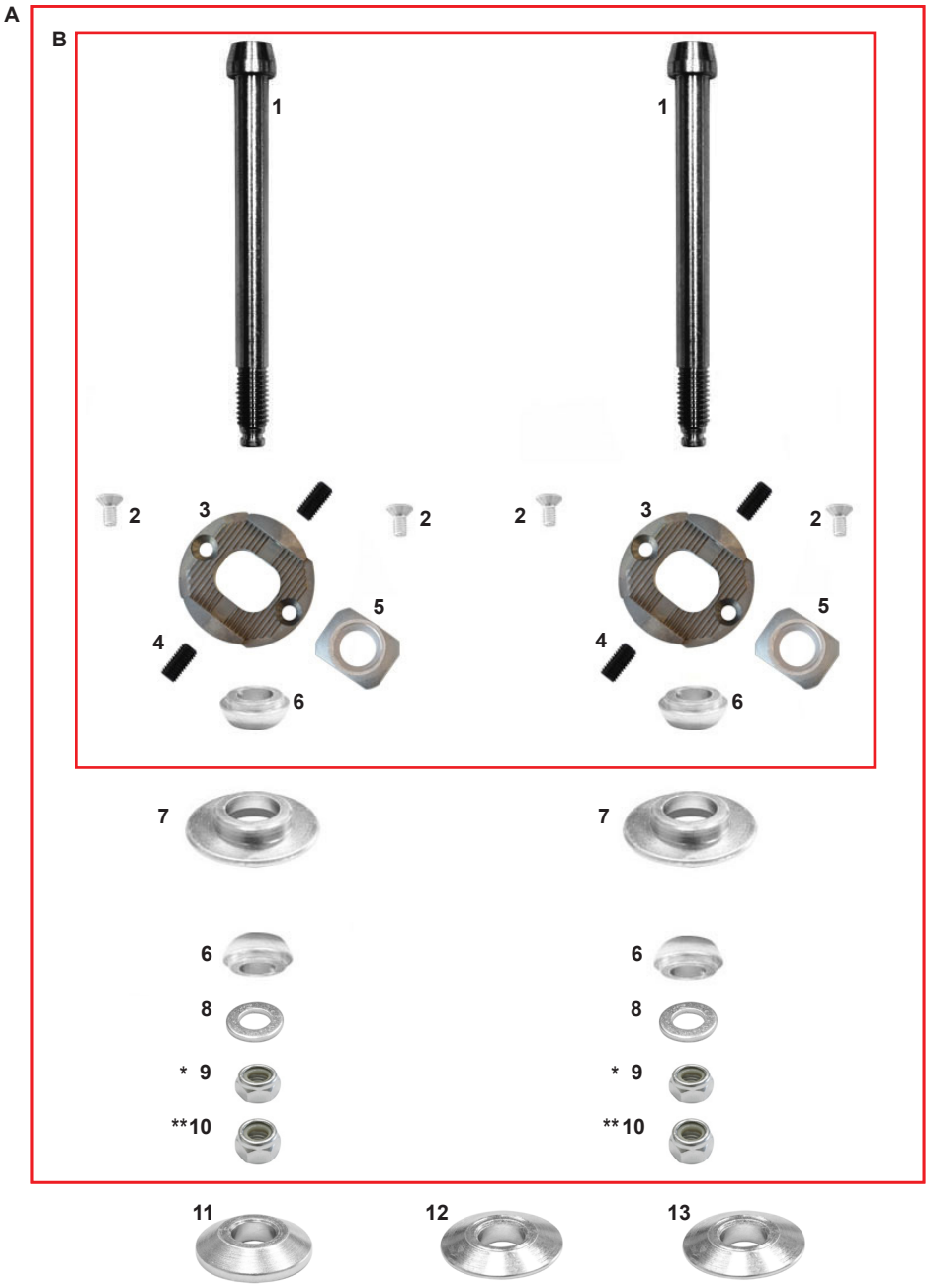


| ES | COD. | DESCRIZIONE | DESCRIPTION |
|---|---|---|---|
| **A** | FK0.02352 | Set caster Sniper completo KZ/KF | Sniper caster system complete set KZ/KF |
| | FK0.01608 | Set caster Sniper KF completo + spessori | Sniper caster system KF complete set + spacer |
| | FK0.06447 | Set caster Sniper KZ completo + spessori | Sniper caster system Kz complete set + spacer |
| **B** | FK0.02353 | Set caster Sniper new superiore | Sniper caster system set new top |
| **1** | AFS.04659 | Vite fusello 10x111 rettificata | Stub axle bolt 10x111 rectified |
| **2** | AFN.02389 | Vite M 4x10 svasata | M 4x10 countersunk head screw |
| **3** | AFS.02352 | Caster porta piastrina A | Caster support A |
| **4** | AFN.02390 | Grani M 5x10 caster doppio | Grub screw M 5x10 (set) |
| **5** | AFS.02353 | Caster piastrina alta B | High plate caster B |
| **6** | FZ0.02450 | Boccola mezza sfera caster | Bushing half caster |
| **7** | FZ0.01602 | Caster fisso STD | Fixed caster STD |
| **8** | AFN.01637 | Rondella 10,5-20x2 | Washer 10,5-20x2 |
| **9** | AFN.00657 | Dado M10 autoblock basso | Nut M10 low self-locking |
| **10** | AFN.02393 | Dado M10 autoblock alto | Nut M10 high self-locking |
| **11** | FZ0.01769 ** | Spessore 10-28x3 fusello piano | Stub axle space 10-28x3 plain |
| **12** | FZ0.01719 ** | Spessore 10-28x6 fusello conico | Stub axle space 10-28x6 conical |
| **13** | FZ0.01607 * | Spessore 10-28x6 fusello piano | Stub axle space 10-28x6 plain |

* Set caster sniper new completo KZ - Sniper caster system new complete KZ
** Set caster sniper new completo KF - Sniper caster system new complete KF

A

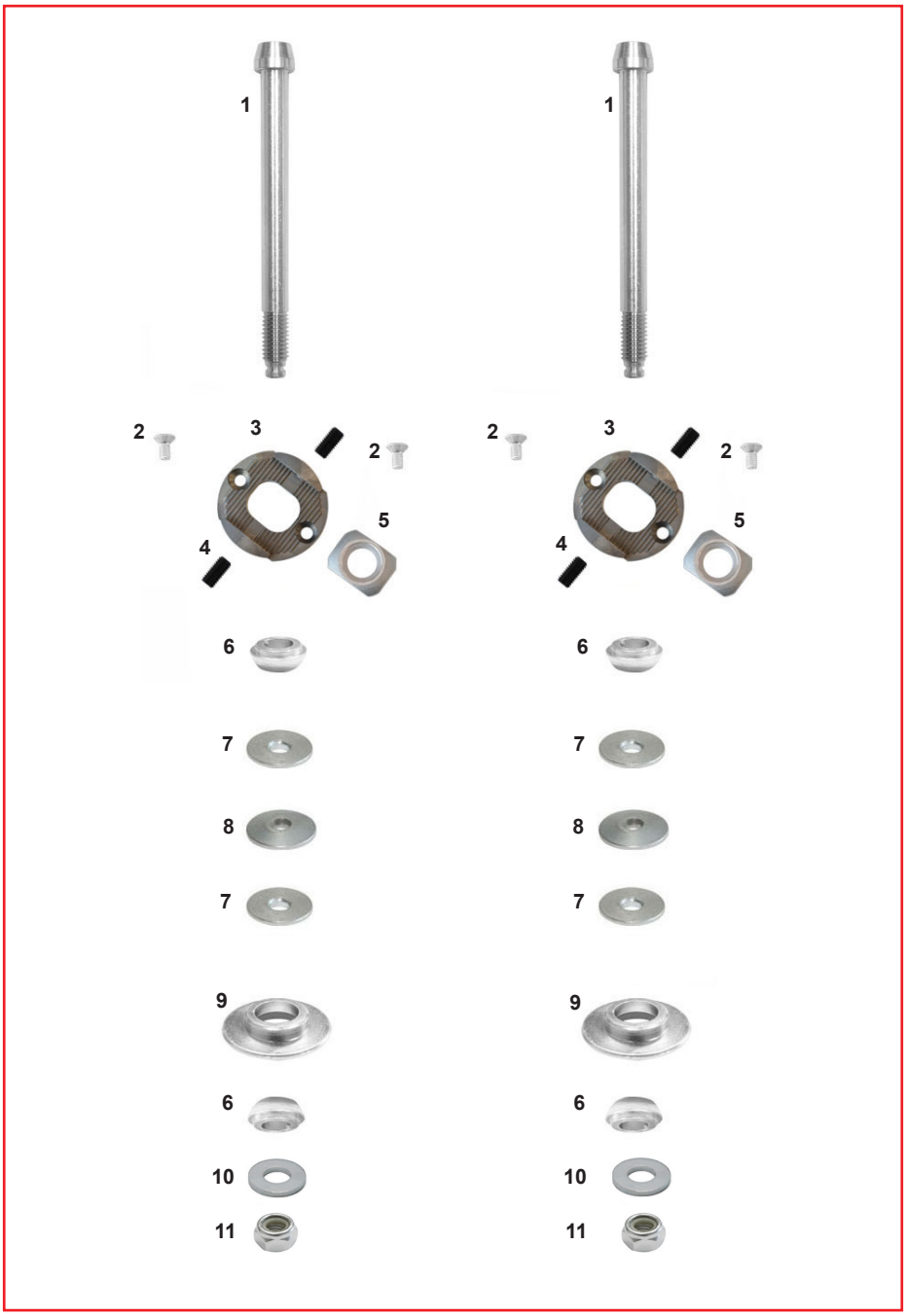


| ES | COD. | DESCRIZIONE | DESCRIPTION |
|---|---|---|---|
| **A** | FK0.01017 | Caster mini Sniper completo | Complete Mini Sniper caster |
| **1** | FBN.02391 | Vite fusello 8x110 caster mini | Stub axle bolt mini 8x110 black |
| **2** | AFN.02408 | Vite M 4x8 svasata | M 4x8 countersunk head screw |
| **3** | AFS.02352 | Caster porta piastrina A | Caster plate support A |
| **4** | AFN.02390 | Grani M 5x10 caster doppio | Grub screw M 5x10 double caster (set) |
| **5** | AFS.02353 | Caster piastrina alta B | Caster plate high B |
| **6** | FZ0.02666 | Boccola mezza sfera caster | Bushing half caster |
| **7** | FZ0.03152 | Spessore 8-28x3 fusello piano | Stub axle spacer 8-28x3 plain |
| **8** | FZ0.03147 | Spessore 8-28x6 fusello conico | Stub axle spacer 8-28x6 conical |
| **9** | SZ0.03559 | Caster fisso mini kart | Fixed carter mini kart |
| **10** | AFN.00108 | Rondella 8,5-18x2 | Washer 8,5-18x2 |
| **11** | AFN.00128 | Dado M8 autobloccante alto | Nut M8 High self-locking |

# FUSELLO MINI 8.17- STUB AXLE 8.17

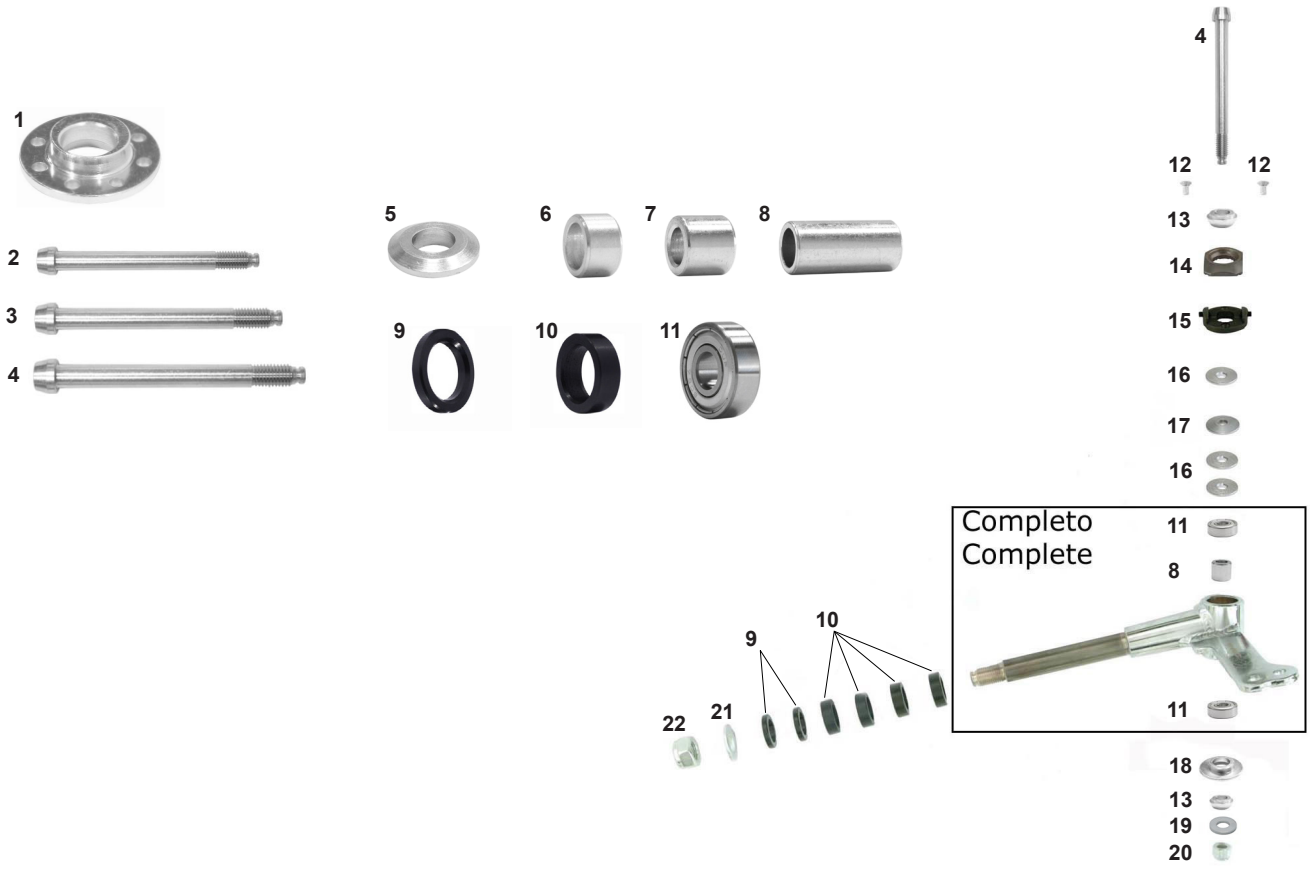


| ES | COD. | DESCRIZIONE | DESCRIPTION |
|---|---|---|---|
| **1** | FZ0.01603 | Caster eccentrico 8F sferico | 8-hole eccentric spherical caster |
| **2** | FBN.01197 | Vite fusello 8x75 | Stub axle bolt 8x75 |
| **3** | FBN.00176 | Vite fusello 8x85 | Stub axle bolt 8x85 |
| **4** | FBN.02391 | Vite fusello 8x110 caster mini | Stub axle bolt mini 8x110 black |
| **5** | FBN.00064 | Spessore 8,5-18x4 fusello | Spacer 8,5-18x4 stub axle |
| **6** | SBN.00089 | Spessore 8x7 interno fusello | Stub axle internal spacer 8x7 |
| **7** | SBN.00056 | Spessore 8x12 interno fusello | Stub axle internal spacer 8x12 |
| **8** | SBN.01043 | Spessore 8x26 interno fusello mini | Stub axle internal spacer 8x26 mini |
| **9** | FAN.00068 | Distanziale perno fusello 4mm nero | Stub axle spacer 4mm black |
| **10** | FAN.00066 | Distanziale perno fusello 8mm nero | Stub axle spacer 8mm black |
| **11** | AFN.00055 | Cuscinetto 608 fusello | 608 bearing for spindle |
| **12** | AFN.00278 | Vite M 4x6 cilindrica | M 4x6 socket head screw |
| **13** | FZ0.02666 | Boccola mezza sfera caster foro Ø8 | Bushing half spherical caster hole Ø8 |
| **14** | AFS.02353 | Caster piastrina alta B | Caster high plate B |
| **15** | FM0.02352 | Caster porta piastrina A | Caster support plate A |
| **16** | FZ0.03152 | Spessore 8-28x3 fusello piano | Stub axle spacer 8-28x3 plain |
| **17** | FZ0.03147 | Spessore 8-28x6 fusello conico | Stub axle spacer 8-28x6 conical |
| **18** | SZ0.03559 | Caster fisso mini kart | Fixed caster mini kart |
| **19** | AFN.00108 | Rondella 8,5-18x2 | Washer 8,5-18x2 |
| **20** | AFN.00128 | Dado M 8 autoblock alto | Nut M 8 high self-locking |
| **21** | AFN.01564 | Rondella 15-30x2,5 | Washer 15-30x2,5 |
| **22** | AFN.00058 | Dado M14x1,5 autoblock | Nut M14x1,5 self-locking |

# FUSELLO 10.25 - STUB AXLE 10.25

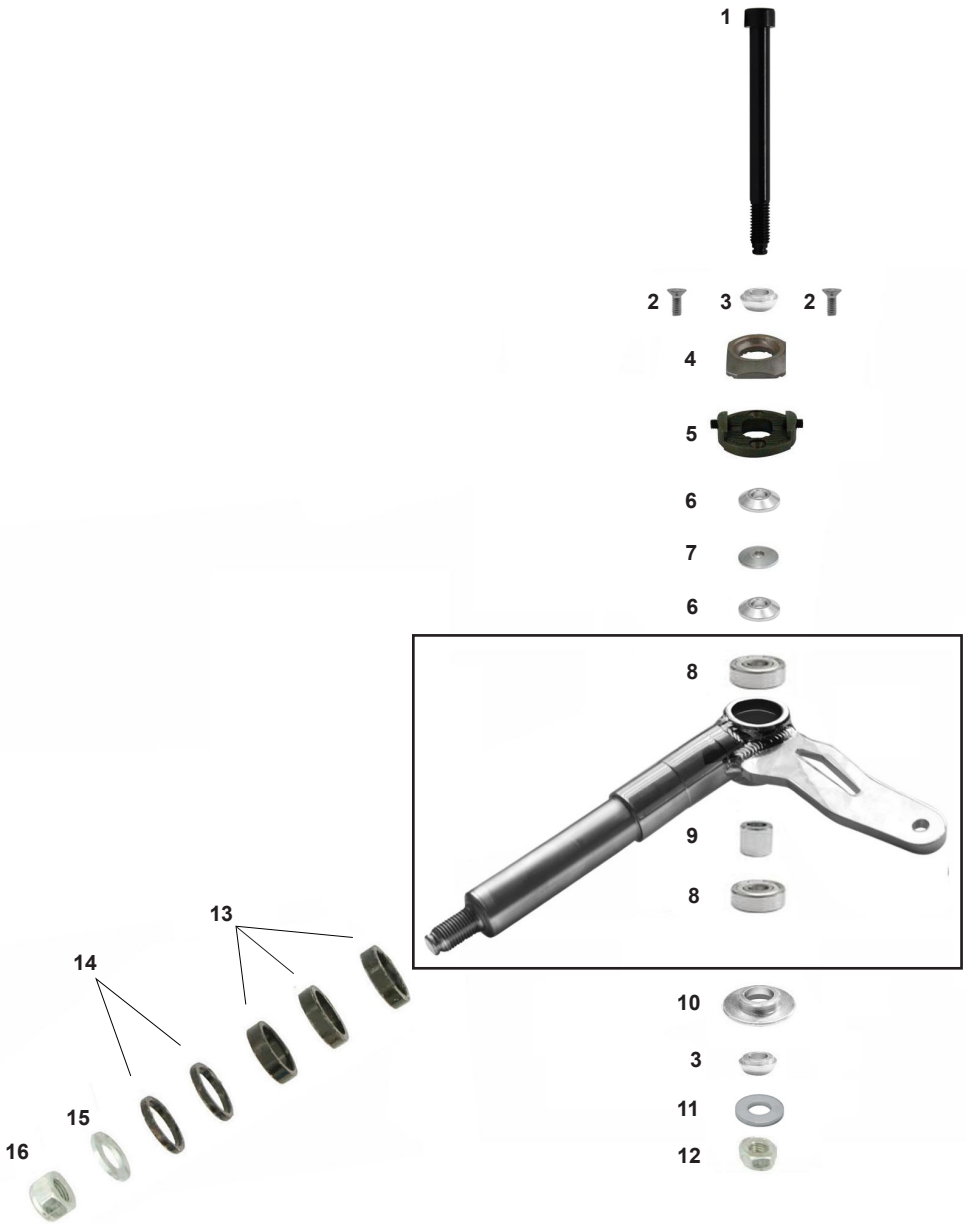


| ES | COD. | DESCRIZIONE | DESCRIPTION |
|---|---|---|---|
| **1** | AFS.04659 | Vite fusello 10x111 rettificata | Stub axle bolt 10x111 rectified |
| **2** | AFN.02389 | Vite M 4x10 svasata | M 4x10 countersunk head screw |
| **3** | FZ0.02450 | Boccola mezza sfera caster | Bushing half spherical caster |
| **4** | AFS.02353 | Caster piastrina alta B | Caster high plate B |
| **5** | FM0.02352 | Caster porta piastrina A + grani | Caster support A + grub |
| **6** | FZ0.01769 | Spessore 10-28x3 fusello piano | Stub axle spacer 10-28x3 plain |
| **6** | FZ0.01607 | Spessore 10-28x6 fusello piano | Stub axle spacer 10-28x6 plain |
| **7** | FZ0.05150 | Spessore 10-28x6,35 fusello conico | Stub axle spacer 10-28x6,35 conical |
| **7** | FZ0.01770 | Spessore 10-28x3 fusello conico | Stub axle spacer 10-28x3 conical |
| **8** | AFN.00959 | Cuscinetto 6000 fusello | Bearing 6000 stub axle |
| **9** | SBN.01605 | Spessore 10x24 interno fusello | Stub axle internal spacer 10x24 |
| **10** | FZ0.01602 | Caster fisso STD | Fixed caster STD |
| **11** | AFN.00108 | Rondella 8,5-18x4 | Washer 8,5-18x4 |
| **12** | AFN.02393 | Dado M10 autoblock alto | Nut M10 high self-locking |
| **13** | FAN.01739 | Distanziale perno fusello 25 8mm | Stub axle spacer 25 8mm black |
| **14** | FAN.01738 | Distanziale perno fusello 25 4mm | Stub axle spacer 25 4mm black |
| **15** | AFN.01564 | Rondella 15-30x2,5 | Washer 15-30x2,5 |
| **16** | AFN.00058 | Dado M14x1,5 autoblock | Nut M14x1,5 self-locking |

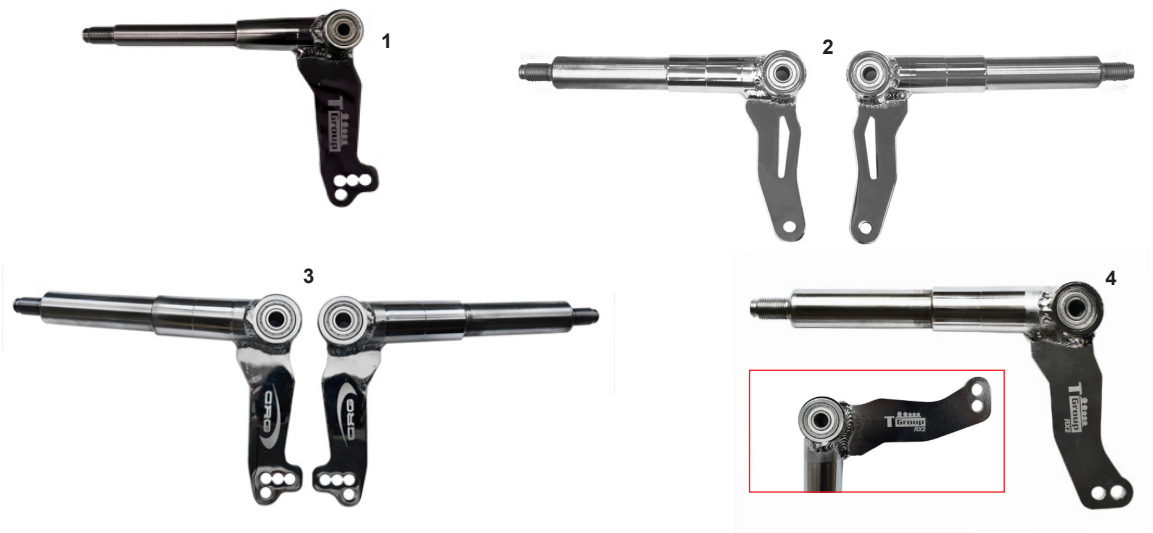


| ES | COD. | DESCRIZIONE | DESCRIPTION |
|---|---|---|---|
| **1** | FM0.1337D | Fusello Mini dx completo | Stub axle Mini rh complete |
| **1** | FM0.1337S | Fusello Mini sx completo | Stub axle Mini lf complete |
| **2** | FM0.2869D | Fusello DD RX 10-25 dx completo D std | Stub axle DD RX 10-25 rh complete D std |
| **2** | FM0.2869S | Fusello DD RX 10-25 sx completo D std | Stub axle DD RX 10-25 lf complete D std |
| **2** | FM0.2870D | Fusello DD RX 10-25 dx completo B | Stub axle DD RX 10-25 rh complete B |
| **2** | FM0.2870S | Fusello DD RX 10-25 sx completo B | Stub axle DD RX 10-25 lf complete B |
| **3** | FM0.2866D | Fusello DD 10-25 dx 4F completo D | Stub axle DD 10-25 rh 4H complete D |
| **3** | FM0.2866S | Fusello DD 10-25 sx 4F completo D | Stub axle DD 10-25 lf 4H complete D |
| **3** | FM0.1754D | Fusello DD 10-25 dx 4F completo B | Stub axle DD 10-25 rh 4H complete B |
| **3** | FM0.1754S | Fusello DD 10-25 sx 4F completo B | Stub axle DD 10-25 lf 4H complete B |
| **4** | FM0.5124D | Fusello CRG KF 10-25 RX2 B DX | Stub axle CRG KF 10-25 RH RX2 B |
| **4** | FM0.5124S | Fusello CRG KF 10-25 RX2 B SX | Stub axle CRG KF 10-25 LF RX2 B |
| **4** | FM0.5125D | Fusello CRG KF 10-25 RX2 D DX | Stub axle CRG KF 10-25 RH RX2 D |
| **4** | FM0.5125S | Fusello CRG KF 10-25 RX2 D SX | Stub axle CRG KF 10-25 LF RX2 D |

| Lettera | Grado di inclinazione |
|---|---|
| B | 10,25 |
| C | 10,5 |
| D | 11 |
| E | 13 |

| Letter | Degree of inclination |
|---|---|
| B | 10,25 |
| C | 10,5 |
| D | 11 |
| E | 13 |

Tutti i fuselli sono disponibili anche non completi con il cod. iniziale “SC0” - All the stub axle are also available not complete with the part cod. starting with “SC0”

**Fuselli senza piastrina supporto freno anteriore DD - I fuselli con piastrina supporto freno anteriore sono disponibili solo su richiesta.**
**Stub axles without front brake support plate – the stub axles without front brake support plate are available only upon request.**

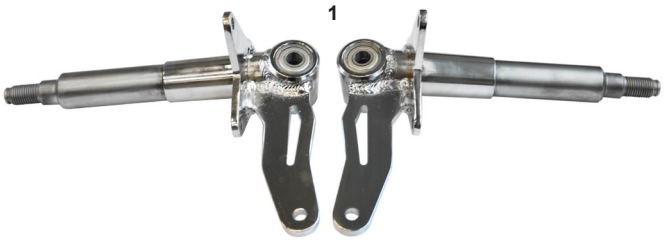

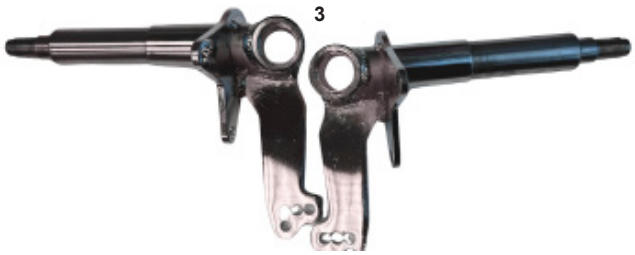

| ES | COD. | DESCRIZIONE | DESCRIPTION |
|---|---|---|---|
| **1** | FM0.4268D | Fusello KZ V11 10-25 dx RX completo std | Stub axle KZ V11 10-25 rh RX complete st. |
| **1** | FM0.4268S | Fusello KZ V11 10-25 sx RX completo std | Stub axle KZ V11 10-25 lf RX complete std |
| | FM0.4456D | Fusello KZ V11 10-25 dx RX B completo | Stub axle KZ V11 10-25 rh RX B complete |
| | FM0.4456S | Fusello KZ V11 10-25 sx RX B completo | Stub axle KZ V11 10-25 lf RX B complete |
| **2** | FM0.5130D | Fusello CRG KZ V11 10-25 RX2 B DX | Stub axle CRG KZ V11 10-25 RH RX2 B |
| **2** | FM0.5130S | Fusello CRG KZ V11 10-25 RX2 B SX | Stub axle CRG KZ V11 10-25 LF RX2 B |
| **2** | FM0.5131D | Fusello CRG KZ V11 10-25 RX2 D DX | Stub axle CRG KZ V11 10-25 RH RX2 D |
| **2** | FM0.5131S | Fusello CRG KZ V11 10-25 RX2 D SX | Stub axle CRG KZ V11 10-25 LF RX2 D |
| | FM0.5213D | Fusello CRG KZ V11 10-25 RX2 F DX | Stub axle CRG KZ V11 10-25 RH RX2 F |
| | FM0.5213S | Fusello CRG KZ V11 10-25 RX2 F SX | Stub axle CRG KZ V11 10-25 LF RX2 F |
| **3** | FM0.4369D | Fusello KZ V11 10-25 dx 4F completo B | Stub axle KZ V11 10-25 rh 4H complete B |
| **3** | FM0.4369S | Fusello KZ V11 10-25 sx 4F completo B | Stub axle KZ V11 10-25 lf 4H complete B |
| **3** | FM0.4291D | Fusello KZ 10-25 dx 4F completo B | Stub axle KZ 10-25 rh 4H complete B |
| **3** | FM0.4291S | Fusello KZ 10-25 sx 4F completo B | Stub axle KZ 10-25 lf 4H complete B |
| **4** | FM0.3515D | Fusello V09 KZ RX 10-25 dx completo B | Stub axle V09 KZ RX 10-25 rh complete B |
| **4** | FM0.3515S | Fusello V09 KZ RX 10-25 sx completo B | Stub axle V09 KZ RX 10-25 lf complete B |
| **4** | FM0.2868D | Fusello V09 KZ RX 10-25 dx completo D | Stub axle V09 KZ RX 10-25 rh complete D |
| **4** | FM0.2868S | Fusello V09 KZ RX 10-25 sx completo D | Stub axle V09 KZ RX 10-25 lf complete D |
| **3** | FM0.2016D | Fusello KZ V11 10-25 dx 4F completo std | Stub axle KZ V11 10-25 rh 4H complete std |
| **3** | FM0.2016S | Fusello KZ V11 10-25 sx 4F completo std | Stub axle KZ V11 10-25 lf 4H complete std |
| **3** | FM0.2001D | Fusello KZ 10-25 dx 4F completo C | Stub axle KZ 10-25 rh 4H complete C |
| **3** | FM0.2001S | Fusello KZ 10-25 sx 4F completo C | Stub axle KZ 10-25 lf 4H complete C |
| **3** | FM0.2865D | Fusello KZ 10-25 dx 4F completo D | Stub axle KZ 10-25 rh 4H complete D |
| **3** | FM0.2865S | Fusello KZ 10-25 sx 4F completo D | Stub axle KZ 10-25 lf 4H complete D |

1

3

4

13 14 15

2

16

| ES COD. | | DESCRIZIONE | DESCRIPTION |
|---|---|---|---|
| **1** | FK0.04624 | Set cerchi pioggia alluminio H130 - H180 | Aluminum wet rims set H130-H180 |
| **2** | FM0.04572 | Cerchio alluminio H130 ant. c/viti compl. pioggia | Alu. front wet rim H130 + screws compl. |
| **3** | FM0.04573 | Cerchio alluminio H180 post. c/viti compl. pioggia | Alu. rear wet rim H180 + screws compl. |
| **4** | FK0.01201 | Set cerchi alluminio H110 - H140 mini | Aluminum rims set H110 - H140 mini |
| **5** | FM0.00455 | Cerchio alluminio H110 anteriore mini completo | Aluminum front rim H110 mini complete |
| **6** | FM0.01186 | Cerchio alluminio H140 mini posteriore completo | Aluminum rear rim H140 mini complete |
| **7** | FK0.05426 | Set cerchi MG H132-H212 R2.0 CRG | MG rims set H132-H212 R2.0 CRG |
| **8** | FM0.05196 | Cerchio MG H132 R2.0 ant. CRG compl STD | MG front rim H132 R2.0 CRG complete STD |
| **9** | FM0.05197 | Cerchio MG H212 R2.0 post. CRG compl STD | MG rear rim H212 R2.0 CRG complete STD |
| **10** | FK0.05442 | Set cerchi MG H120-H150 R2.0 CRG mini | MG rims set H120-H150 R2.0 CRG mini |
| **11** | FM0.05289 | Cerchio MG H120 R2.0 ant. CRG compl. mini STD | MG front rim H120 R2.0 CRG compl. mini STD |
| **12** | FM0.05290 | Cerchio MG H150 R2.0 post.CRG compl. mini STD | MG rear rim H150 R2.0 CRG compl. mini STD |
| **13** | CRG.00173 | Vite M 5x12 cerchio completa + or | M 5x12 wheel screw assay + or |
| **14** | AFS.02649 | Valvola tubless corta | Tubless valve short |
| **15** | AFN.00008 | Cuscinetto mozzo anteriore | Bearing front hub |
| **16** | FM0.00857 | Cerchio posteriore MG H180 CRG compl. | Rear MG H180 rim CRG black matte compl. |

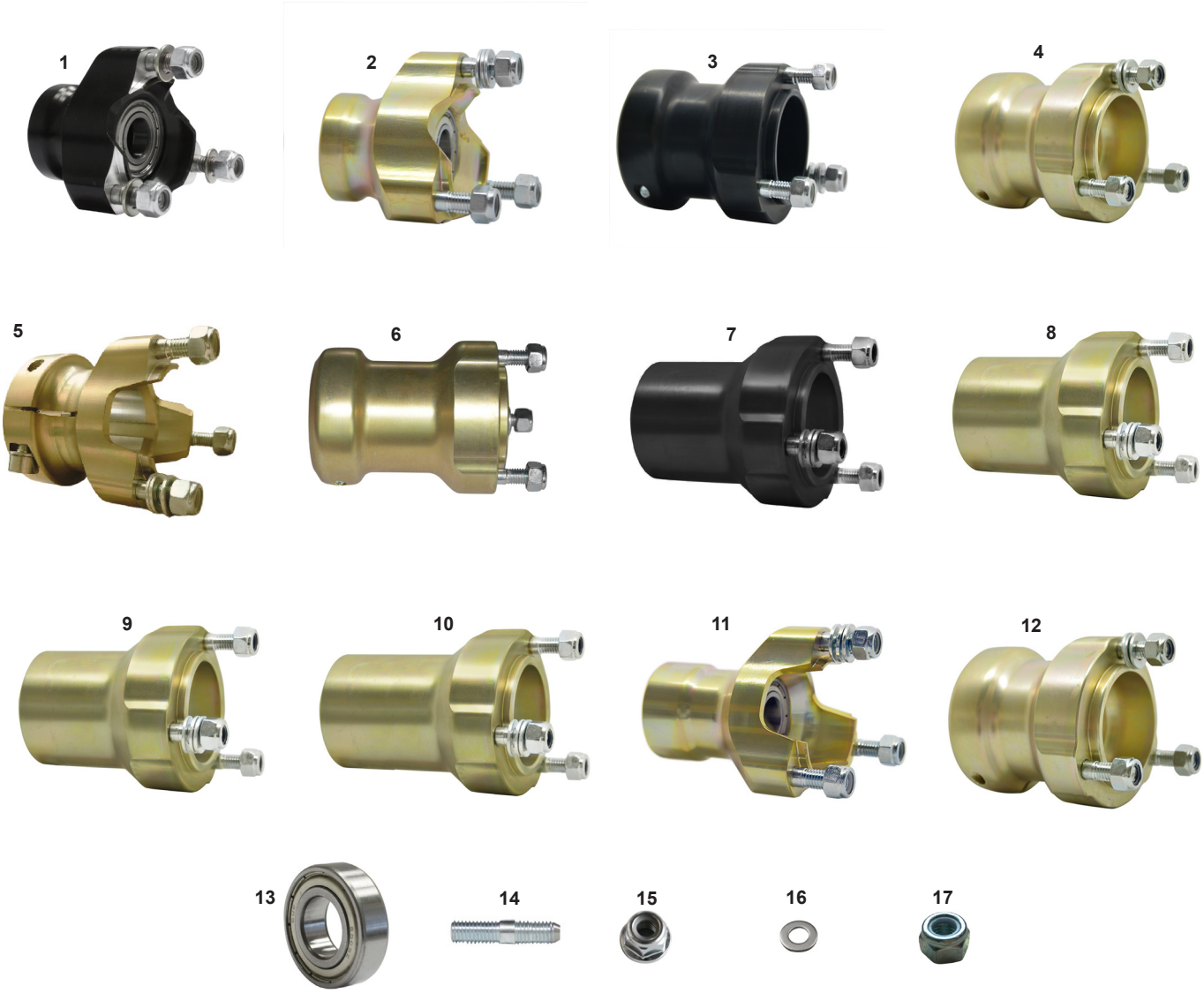


| ES | COD. | DESCRIZIONE | DESCRIPTION |
|---|---|---|---|
| 1 | FMG.00840 | Mozzo ant. all. 17 corto oro MINI completo | Front hub MINI 17 short gold aluminum compl. |
| 2 | FMN.00840 | Mozzo ant. MINI 17 corto completo | Front hub MINI 17 short complete |
| 3 | FMN.05666 | Mozzo ant. KZ 40x80 R2.0 all. nero compl. | Front hub KZ 40x80 R2.0 alu. black complete |
| 4 | FMG.05666 | Mozzo ant. KZ 40x80 R2.0 all. oro compl. | Front hub KZ 40x80 R2.0 alu. gold complete |
| 5 | FMG.00321 | Mozzo ant. KZ 40x82 all. oro compl. | Front hub KZ 40x82alu. gold complete |
| 6 | AFS.05688 | Mozzo ant. KZ 40x96 R2.0 MG | Front hub KZ 40x96 R2.0 magnesium |
| 7 | FMN.05664 | Mozzo ant. KF 25x80 R2.0 all. nero compl. | Front hub Kf 25x80 R2.0 alu. black complete |
| 8 | FMG.05664 | Mozzo ant. KF 25x80 R2.0 all. oro compl. | Front hub Kf 25x80 R2.0 alu. gold complete |
| 9 | AFS.05685 | Mozzo ant. OK 25x82 R2.0 MG | Front hub OK 25x82 R2.0 magnesium |
| 10 | AFS.05686 | Mozzo ant. DD 25x93 R2.0 MG | Front hub DD 25x93 R2.0 magnesium |
| 11 | FMG.05452 | Mozzo ant. all. 17 M doppio cusc. compl. | Alu. front hub 17 M double bearing complete |
| 12 | AFS.05687 | Mozzo ant. KZ 40x80 R2.0 MG | Front hub KZ 40x80 R2.0 magnesium |
| 12 | AFN.00008 | Cuscinetto mozzo anteriore Ø17 | Bearing front hub Ø17 |
| 12 | AFN.01750 | Cuscinetto mozzo anteriore Ø25 | Bearing front hub Ø25 |
| 13 | AFN.02879 | Cuscinetto mozzo anteriore Ø25 KF | Bearing front hub Ø25 KF |
| 14 | AFS.00126 | Prigioniero M8 | Stud M8 |
| 15 | AFN.05230 | Dado M8 autofrenante flangiato alto | High flanged self-locking M8 nut |
| 16 | AFN.00350 | Rondella 8,5-16x1,5 | Washer 8,5-16x1,5 |
| 17 | AFN.00128 | Dado M8 autoblock alto | Nut M8 high self-locking |

# MOZZI POSTERIORI NERI - REAR WHEEL HUBS BLACK

1

2

3

4

5

6

| ES | COD. | DESCRIZIONE | DESCRIPTION |
|---|---|---|---|
| **1** | FMN.00568 | Mozzo posteriore 25x40 nero completo | Rear hub 25x40 black complete |
| **2** | FMN.00851 | Mozzo posteriore 25x75 nero completo | Rear hub 25x75 black complete |
| **3** | FMN.00930 | Mozzo posteriore 30x35 nero completo | Rear hub 30x35 black complete |
| **4** | FMN.00850 | Mozzo posteriore 30x40 nero completo | Rear hub 30x40 black complete |
| **5** | FMN.00735 | Mozzo posteriore 30x75 nero completo | Rear hub 30x75 black complete |
| **6** | FMN.04160 | Mozzo posteriore 40x125 nero 2 viti compl. | Rear hub 40x125 black 2 screws compl. |

# MOZZI POSTERIORI ORO - REAR WHEEL HUBS GOLD

1

2

3

4
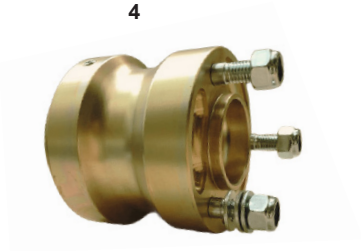

5
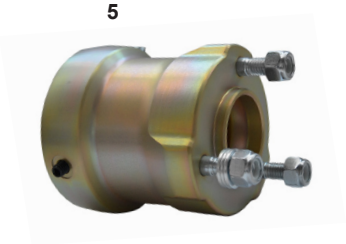

6

7

8
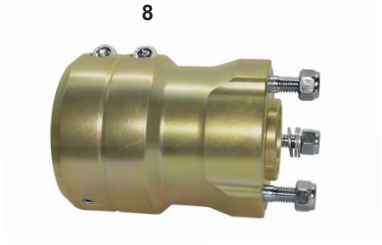

9

10

11
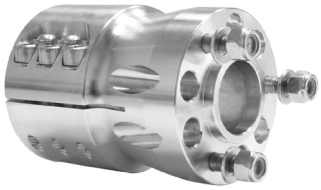

15

16

17

18

19

| ES | COD. | DESCRIZIONE | DESCRIPTION |
|---|---|---|---|
| **1** | FMG.00930 | Mozzo posteriore 30x35 oro completo | Aluminum rear wheel hub 30x35 gold complete |
| **2** | FMG.00850 | Mozzo posteriore 30x40 oro completo | Aluminum rear wheel hub 30x40 gold complete |
| **3** | FMG.06194 | Mozzo posteriore 40x105 R-line MG | Magnesium rear hub 40x105 R-line |
| **4** | AFS.01543 | Mozzo posteriore 50x78 MG compl. oro | Magnesium rear hub 50x78 compl. gold |
| **5** | FMG.05539 | Mozzo posteriore 50x85 R2.0 all. oro compl. | Mag. rear hub 50x85 R2.0 alu. gold compl. |
| **6** | AFS.05689 | Mozzo posteriore 50x95 R 2.0 MG | Magnesium rear hub 50x95 R 2.0 |
| **7** | FMG.05540 | Mozzo post. 50x95 R2.0 all. flang oro compl. | Mag. rear hub 50x95 R2.0 alu. gold compl. |
| **8** | AFS.05690 | Mozzo posteriore 50x105 R2.0 due viti MG | Magnesium rear hub 50x105 R2.0 2 screws |
| **9** | FMG.05541 | Mozzo post. 50x105 R2.0 all. flang oro compl. | Rear hub 50x105 R2.0 alu. flang gold compl. |
| **10** | AFS.04155 | Mozzo posteriore 50x120 due viti R-line MG | Magnesium rear hub 50x120 R-line 2 screws |
| **11** | FMG.02659 | Mozzo posteriore 50x116 tre viti | Magnesium rear hub 50X116 3 screws |
| **12** | AFS.00126 | Prigioniero M8 | Stud M8 |
| **13** | AFN.05230 | Dado M8 autofrenante flangiato alto | High flanged self-locking M8 nut |
| **14** | AFN.02640 | Grano M6x16 std | Grub screw M6x16 std |
| **15** | AFN.00350 | Rondella 8,5-16x1,5 | Washer 8,5-16x1,5 |
| **16** | AFN.00128 | Dado M8 autoblock alto | Nut M8 high self-locking |

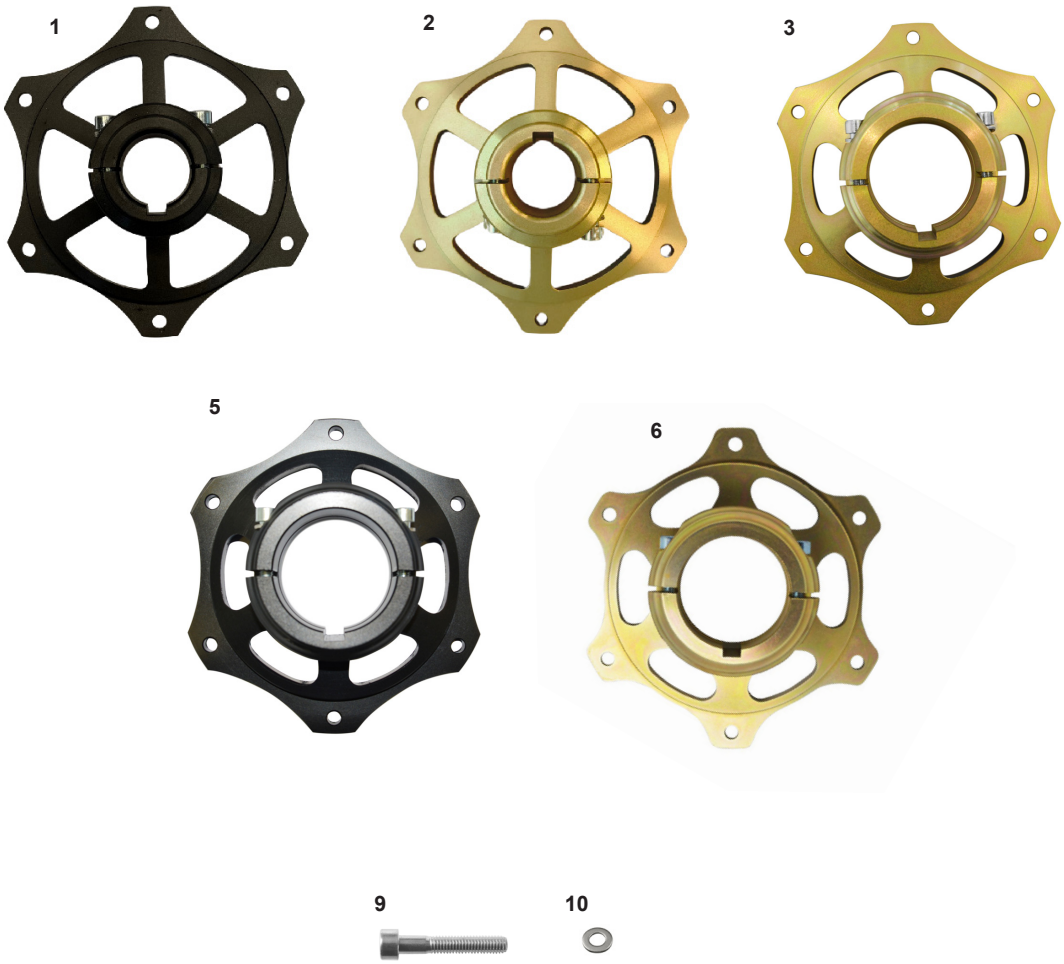


| ES | COD. | DESCRIZIONE | DESCRIPTION |
|---|---|---|---|
| 1 | FMN.00569 | Mozzo corona 25 Puffo CRG | Sprocket carrier Puffo 25 CRG |
| 2 | FMG.G0569 | Mozzo corona 25 CRG oro | Sprocket carrier 25 CRG gold |
| 3 | FMN.00736 | Mozzo corona 30 CRG nero | Sprocket carrier 30 CRG black |
| 4 | FMG.G0736 | Mozzo corona 30 CRG oro | Sprocket carrier 30 CRG gold |
| 5 | FMN.00445 | Mozzo corona 40 CRG | Sprocket carrier 40 CRG |
| 6 | FMG.04998 | Mozzo corona 50 R-Line eco. compl. all. | Sprocket carrier 50 R-Line econom. compl. alu. |
| 7 | FMN.04998 | Mozzo corona 50 R-Line eco. compl. nero | Sprocket carrier 50 R-Line econom. compl. black |
| 8 | AFS.03415 | Mozzo corona 50 R-line MG | Sprocket carrier 50 R-line MG |
| 9 | AFN.02154 | Vite M 6x35 cilindirca 12.9 | M 6x35 socket head screw 12.9 |
| 10 | AFN.06156 | Rondella 6,5-10x1 acciaio | Brass washer 6,5-10x1 inox |

1

2

3

4

5

6

7

8

9

10

11

12

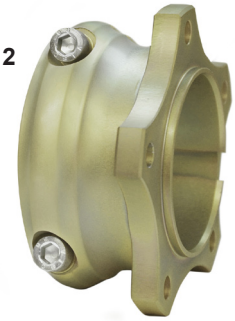

13

14

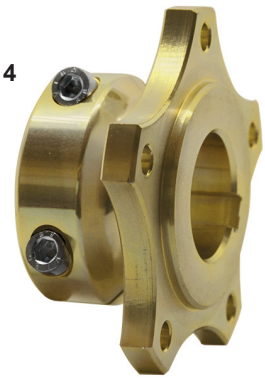

| ES | COD. | DESCRIZIONE | DESCRIPTION |
|---|---|---|---|
| **1** | AFN.00008 | Cuscinetto mozzo anteriore Ø17 | Bearing front hub Ø17 |
| **2** | AFN.01750 | Cuscinetto mozzo anteriore Ø25 | Bearing front hub Ø25 |
| **3** | AFN.00137 | Vite M 6x35 cilindrica | M 6x35 socket head screw |
| **4** | AFN.06156 | Rondella 6,5-10X1 acciaio inox | Brass washer 6,5-10x1 inox |
| **5** | SAN.01893 | Mozzo disco anteriore alluminio V05 | Aluminum front brake disc hub V05 |
| | FMN.01893 | Mozzo disco anteriore all. V05 compl. | Aluminum front brake disc hub V05 complete |
| **6** | FM0.00835 | Mozzo disco posteriore 25 cadet completo | Rear brake disc hub cadet 25 complete |
| **7** | FMN.00838 | Mozzo disco post. alluminio 25 V04 compl. | Rear brake disc hub V04 25 alu. complete |
| **8** | FMN.00748 | Mozzo disco post. alluminio 30 V04 compl. | Rear brake disc hub V04 30 alu. complete |
| **9** | FMN.04918 | Mozzo disco post. alluminio 40 R-line nero | Rear brake disc hub alu. 40 R-line complete |
| **10** | FM0.04299 | Mozzo disco post. 50 alluminio UP no viti | Rear disc hub 50 aluminum UP no screws |
| **11** | FMN.06224 | Mozzo disco post. all. 50 R2.1 compl. | Rear disc hub aluminum 50 R2.1 complete |
| **12** | FMG.06224 | Mozzo disco post. all. 50 R2.1 oro compl. | Rear disc hub aluminum 50 R2.1 gold compl. |
| **13** | FMG.06223 | Mozzo disco post. all. 40 R2.0 oro compl. | Rear disc hub aluminum 40 R2.0 gold compl. |
| **14** | FMG.G0748 | Mozzo disco post. all. 30 mini oro completo | Rear disc hub aluminum mini 30 gold complete |

23

24

25

26

27

28

| ES | COD. | DESCRIZIONE | DESCRIPTION |
|---|---|---|---|
| 1 | FC0.05293 | Piantone sterzo CRG R 2.0 R25-31 | Steering wheel column CRG R 2.0 R25-31 |
| 2 | FC0.05293M | Piantone sterzo CRG R 2.0 R25-31 M | Steering wheel column CRG R 2.0 R25-31 M |
| 3 | FC0.05291 | Piantone sterzo CRG mini R 2.0 R25-31 | Steering wheel column CRG mini R 2.0 R25-31 |
| 4 | FC0.05270 | Piantone sterzo R 2.0 R 35-40 | Steering wheel column R 2.0 R 35-40 |
| 5 | FC0.05270M | Fermo piantone sterzo R 2.0 R 35-40 M | Steering wheel column R 2.0 R 35-40 M |
| 6 | FC0.00545 | Piantone sterzo mini/baby | Steering column mini/baby |
| 7 | SC0.05271 | Fermo piantone sterzo R 2.0 R 35-40 | Steering wheel column lock R 2.0 R 35-40 |
| 8 | FC0.01513 | Piantone sterzo KF/KZ | Steering column KF/KZ |
| 9 | FC0.00104 | Piantone sterzo KF BS-KT1 X2+4 | Steering column KF X2+4 |
| 10 | FC0.00883 | Piantone sterzo multiforo KF/KZ | Steering column KF/KZ multihole |
| 11 | SC0.05292 | Fermo piantone sterzo R 2.0 R25-31 | Steering wheel column lock R 2.0 R25-31 |
| 12 | FC0.03796 | Piantone sterzo CRG 15 | Steering column CRG 15 |
| 14 | AFS.04812 | Supporto piantone plastica 4 fori | Plastic column support 4 holes |
| 15 | AFN.00154 | Seeger Ø22 piantone | Circlip Ø22 steering column |
| 16 | AFN.00153 | Uniball piantone | Steering column bearing |
| 17 | FKN.00356 | Kit boccola piantone | Steering column lock ring kit |
| 18 | FAN.00356 | Boccola piantone nera | Steering column lock ring black |
| 19 | AFN.00093 | Dado M 6 | Nut M 6 |
| 20 | AFN.00357 | Grano M 6x10 | Grub screw M 6x10 |
| 21 | FAN.01626 | Mozzo volante inclinato | Steering wheel hub inclined |
| 22 | FAG.01626 | Mozzo volante oro inclinato | Steering wheel hub inclined gold |
| 23 | AFS.06744 | Volante Flat out CRG 330 High Grip | Steering wheel 330 High Grip Flat out |
| 24 | AFS.06461 | Volante Flat out CRG 320 Black/Orange | Steering wheel 320 Black/Orange Flat out |
| 24 | AFS.06462 | Volante Flat out CRG 340 Black/Orange | Steering wheel 340 Black/Orange Flat out |
| 24 | AFS.06463 | Volante Flat out CRG 360 Black/Orange | Steering wheel 360 Black/Orange Flat out |
| 25 | AFS.04207 | Volante diesis 320 Black/Orange | Steering wheel 320 Black/Orange |
| 26 | FM0.01796 | Kit montaggio volante disabili compl. | Disabled steering wheel mounting kit compl. |
| 27 | FK0.01689 | Kit montaggio volante disabili | Disabled steering wheel mounting kit |
| 28 | AFS.06997 | Volante Spider CRG 320 3.0 nero/orange | Steering wheel Spider 320 Black/Orange Vs.3.0 |
| 28 | AFS.06998 | Volante Spider CRG 340 3.1 nero/orange | Steering wheel Spider 340 Black/Orange Vs.3.1 |
| 28 | AFS.06999 | Volante Spider CRG 360 3.2 nero/orange | Steering wheel Spider 360 Black/Orange Vs.3.2 |
| 29 | FC0.07034 | Piantone sterzo crg lungo R2.0 R25-31 | Long steering wheel column CRG R25-31 |
| 30 | FC0.07035 | Piantone sterzo crg lungo R2.0 R35-40 | Long steering wheel column CRG R35-40 |

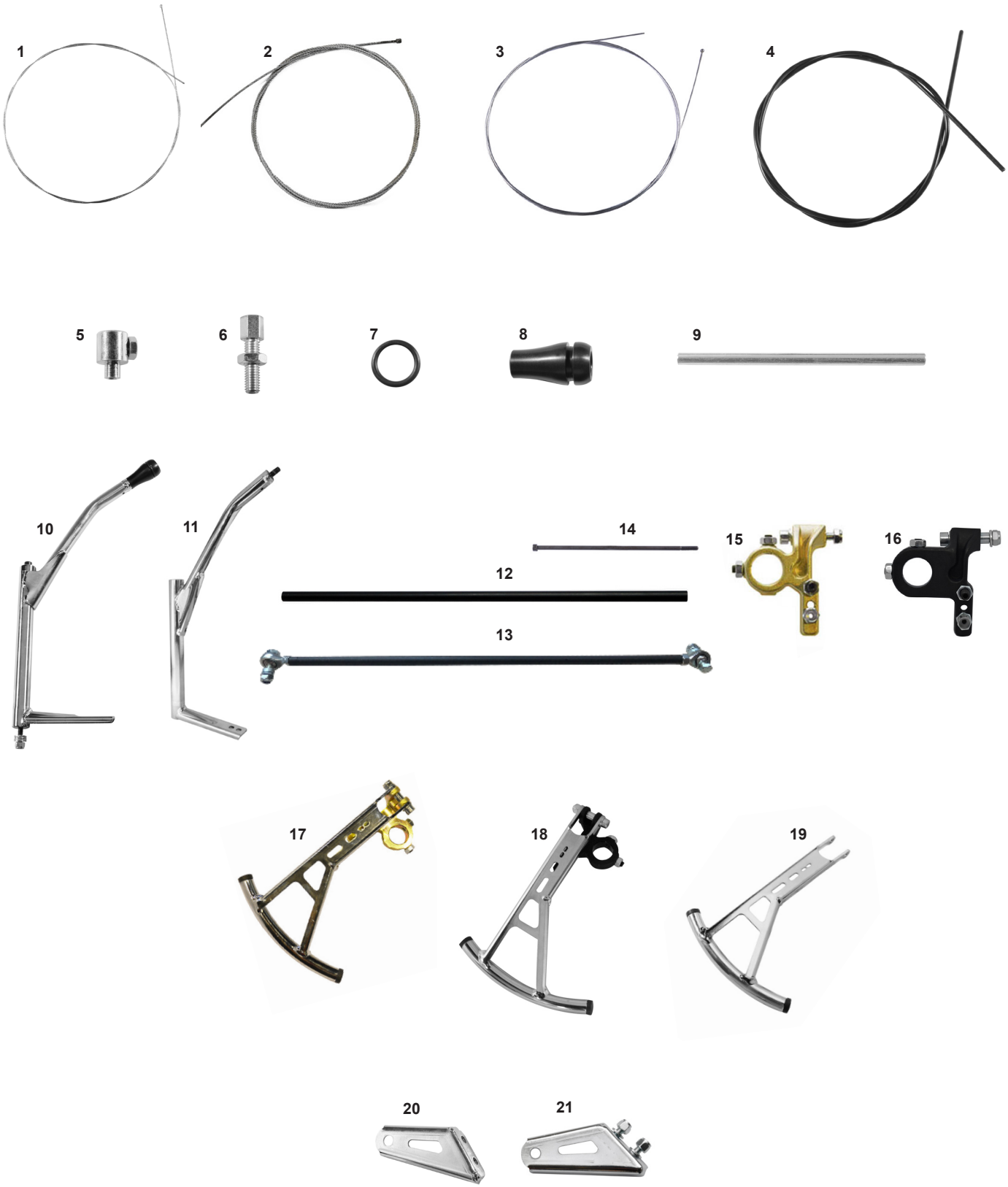
1
2
3
4
5
6
7
8
9
10
11
12
13
14
15
16
17
18
19
20
21

| ES | COD. | DESCRIZIONE | DESCRIPTION |
|---|---|---|---|
| **1** | AFS.00515 | Filo gas | Gas cable |
| **2** | AFS.01364 | Filo frizione | Clutch cable |
| **3** | AFS.00590 | Filo freno meccanico | Brake cable |
| **4** | AMS.01370 | Guaina filo Ø5 gas | Outer cable Ø5 for gas |
| **4** | AMS.00591 | Guaina filo Ø7 gas | Outer cable Ø7 for gas |
| **5** | AFS.00514 | Morsetto filo | Cable clamp |
| **6** | AFS.00257 | Registro filo M6 | Cable adjuster M6 |
| **7** | AFN.00341 | Or pomolo leva cambio | O-ring for gear lever pommel |
| **8** | SAN.01766 | Pomolo leva cambio nero | Black gear lever handle |
| **9** | SZ0.00342 | Spessore interno leva cambio KZ | Gear lever internal spacer KZ |
| **10** | FMN.00339 | Leva cambio CRG KZ nera completa | Gear lever CRG KZ black complete |
| **11** | SC0.00339 | Leva cambio CRG KZ | Gear lever CRG KZ |
| **12** | SAN.00348 | Asta leva cambio KZ 48cm nera | Gear rod KZ black 48cm |
| **13** | FMN.00348 | Asta leva cambio KZ 48cm nera compl. | Gear rod KZ black 48cm complete |
| **14** | FBN.00340 | Vite leva cambio KZ nera | Gear lever screw black KZ |
| **15** | FKG.01925 | Kit attacco leva frizione oro | Clutch lever attachment kit gold |
| **16** | FK0.01925 | Kit attacco leva frizione nero | Clutch lever attachment kit black |
| **17** | CRG.03465 | Leva frizione completa oro | Clutch lever gold complete |
| **18** | CRG.02929 | Leva frizione completa nero | Clutch lever black complete |
| **19** | FK0.02929 | Leva frizione con tappi | Clutch lever with caps |
| **20** | FC0.01840 | Piastrina leva cambio | Gear lever support |
| **21** | FK0.01840 | Piastrina leva cambio completa | Gear lever support complete |

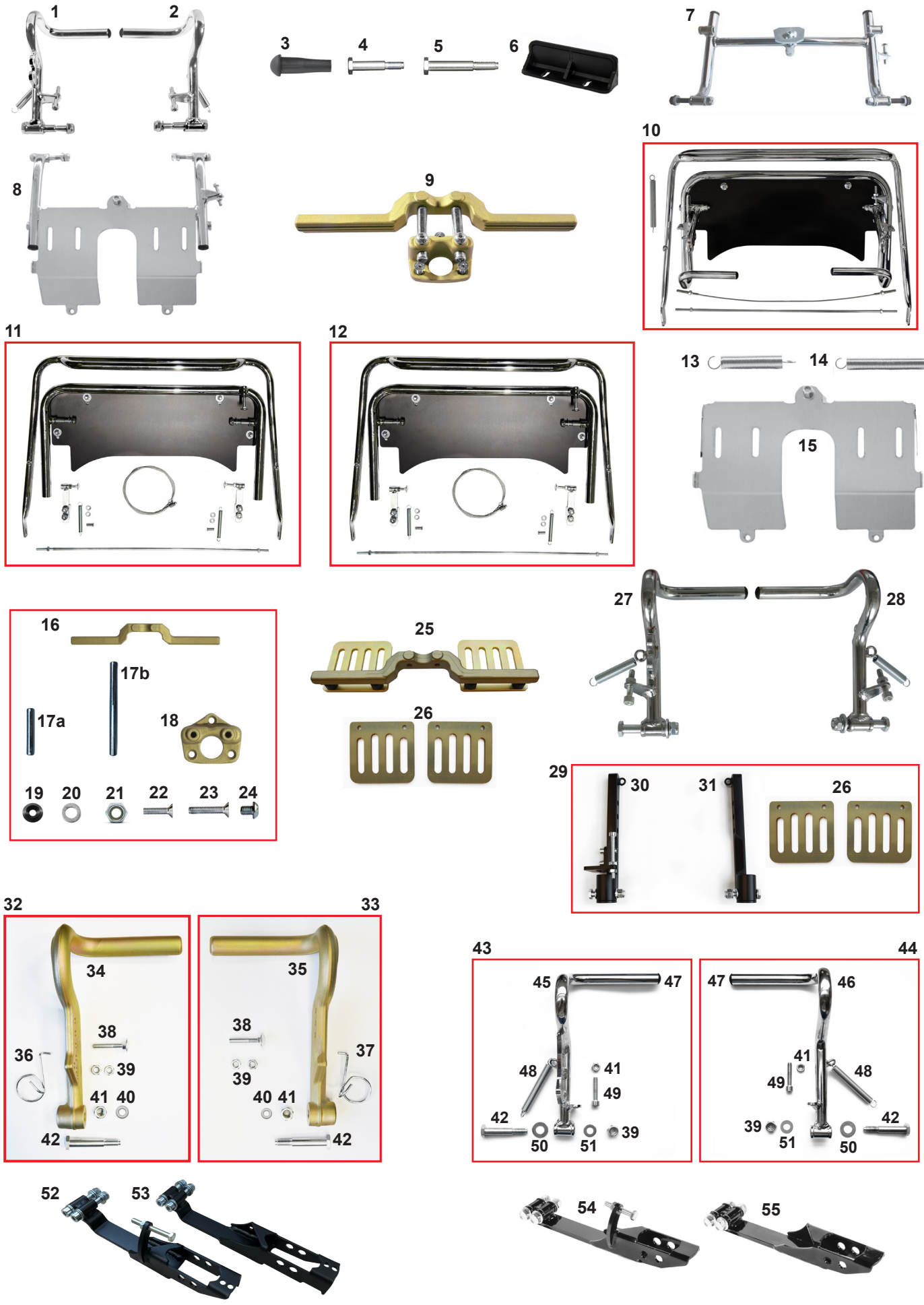
1
2
3
4
5
6
7
8
9
10
11
12
13
14
15
16
17a
17b
18
19
20
21
22
23
24
25
26
27
28
29
30
31
26
32
34
36
38
39
41
40
42
33
35
38
37
39
40
41
42
43
45
47
48
41
49
42
50
51
39
44
47
46
41
49
48
39
51
42
50
52
53
54
55

## PEDALI - PEDALS

| ES | COD. | DESCRIZIONE | DESCRIPTION |
|---|---|---|---|
| 1 | FK0.01550 | Pedale mini freno completo | Foot brake pedal mini complete |
| 2 | FK0.01549 | Pedale mini gas completo | Foot gas pedal mini complete |
| 3 | AFS.00082 | Tappino pedale gas/freno | Pedal cap gas/brake |
| 4 | SBN.00080 | Perno pedale corto | Pedal bolt short |
| 5 | SBN.00271 | Perno pedale lungo | Pedal bolt long |
| 6 | AFS.00245 | Poggiapiedi plastica | Plastic feet support |
| 7 | FM0.01587 | Pedaliera arretrata mini/baby completa | Back pedals mini/baby complete |
| 8 | FK0.01587 | Pedaliera mini xs con poggiapiedi | Pedal extension with feet support xs |
| 9 | FMG.02738 | Poggiapiedi regolabile oro completo | Adjustable feet support gold complete |
| 10 | FK0.01652 | Kit estensione telaio NA2/NA3 | Extension kit chassis NA2/NA3 |
| 11 | FK0.06272.KZ | Kit estensione telaio 507/508 KZ | Extension kit chassis 507/508 KZ |
| 12 | FK0.06272.OK | Kit estensione telaio 507/508 OK | Extension kit chassis 507/508 OK |
| 13 | FZ0.00272 | Molla pedale corta | Short pedal spring |
| 14 | FZ0.00085 | Molla pedale lunga | Long pedal spring |
| 15 | AML.03024 | Poggiapiedi arretrato pedale Mini Honda | Adjustable feet support Mini Honda |
| 16 | SAG.02738 | Poggiapiedi regolabile alluminio oro | Adjustable feet support aluminum gold |
| 17a | SBN.02739 | Perno guida poggiapiedi | Feet support slider |
| 17b | SZ0.06717 | Perno guida poggiapiedi lungo | Feet support slider long |
| 18 | SAG.02737 | Supporto poggiapiedi alluminio oro | Feet support mount aluminum gold |
| 19 | SAN.00249 | Rondella 6 svasata nera | Washer 6 countersunk black |
| 20 | AFN.00105 | Rondella 6,5 - 12x1,5 | Washer 6,5 - 12x1,5 |
| 21 | AFN.00264 | Dado M 6 autoblock alto | Nut M 6 high self - locking |
| 22 | AFN.00261 | Vite M 6x20 svasata | M 6x20 countersunk head screw |
| 23 | AFN.00499 | Vite M 6x30 svasata | M 6x30 countersunk head screw |
| 24 | AFN.02761 | Vite M 8x10 bombata | M 8x10 convex head screw |
| 25 | FMG.04806 | Poggiapiedi reg. con piastra ausiliaria oro | Adj. feet support with gold auxiliary plate |
| OPZ.26 | SAG.04731 | Piastra poggiapiedi ausiliaria alluminio oro | Feet support auxiliary plate aluminum gold |
| 27 | FK0.05371 | Pedale completo mini gas lungo | Mini gas pedal complete long |
| 28 | FK0.05372 | Pedale completo mini freno lungo | Mini brake pedal complete long |
| 29 | FMO.05336 | Pedaliera arretrata Black Mirror + piastre | Black Mirror back control pedal + support |
| 30 | FMO.5336D | Pedaliera arretrata Black Mirror compl. dx | Black Mirror back control pedal compl. rh |
| 31 | FMO.5336S | Pedaliera arretrata Black Mirror compl. sx | Black Mirror back control pedal compl. lh |
| 32 | FMG.05176 | Pedale completo freno oro | Brake pedal complete gold |
| 33 | FMG.05175 | Pedale completo gas oro | Gas pedal complete gold |
| 34 | SAG.05176 | Pedale freno oro | Brake pedal oro |
| 35 | FAG.05175 | Pedale gas oro c/bussole | Gas pedal gold with socket |
| 36 | SZ0.5184S | Molla pedale sx freno | Lh brake pedal spring |
| 37 | SZ0.5184D | Molla pedale dx gas | Rh gas pedal spring |
| 38 | AFN.05960 | Vite M6x35 testa tonda | M6x35 round head screw |
| 39 | AFN.00093 | Dado M6 | Nut M6 |
| 40 | AFN.00287 | Rondella 8,5-14x1,5 | Washer 8,5-14x1,5 |
| 41 | AFN.00128 | Dado M8 autoblock alto | Nut M8 high self-locking |
| 42 | SZ0.05838 | Perno pedale forgiato | Pedal pivot forged |
| 43 | FK0.05853 | Pedale completo freno 2.0 | Brake pedal 2.0 complete |
| 44 | FK0.05852 | Pedale completo gas 2.0 | Foot gas pedal 2.0 complete |
| 45 | SC0.05853 | Pedale freno 2.0 c/tappo | Foot brake pedal 2.0 w/cap |
| 46 | SC0.05852 | Pedale gas 2.0 c/tappo | Gas pedal 2.0 w/cap |
| 47 | AFS.00082 | Tappino pedale gas/freno | Pedal cap gas/brake |
| 48 | FZ0.00085 | Molla pedale lunga | Long pedal spring |
| 49 | AFN.00281 | Vite M 6x30 cilindrica | M 6x30 socket head screw |
| 50 | AFN.01637 | Rondella 10,5 - 20x2 | Washer 10,5 - 20x2 |
| 51 | AFN.00350 | Rondella 8,5 - 16x1,5 | Washer 8,5 - 16x1,5 |
| 52 | FMO.6003D | Pedaliera arr. per pedale forg. dx nero compl. | Back pedals forged right black complete |
| 53 | FMO.6003S | Pedaliera arr. per pedale forg. sx nero compl. | Back pedals forged left black complete |
| 54 | FMO.1429D | Pedaliera arretrata nera dx completa | Back pedals right black complete |
| 55 | FMO.1429S | Pedaliera arretrata nera sx completa | Back pedals left black complete |

1

2

3

| ES | COD. | DESCRIZIONE | DESCRIPTION |
|---|---|---|---|
| **1** | AML.00873 | Pianale Baby NA | Floor tray Baby NA |
| **2** | AML.05100 | Pianale mini Black Mirror | Floor tray Black Mirror |
| **3** | AML.0522002 | Pianale mini Vs. 2.0 | Floor tray mini Vs. 2.0 |

7

8

9

10

11

12

13

14

15

16

| ES | COD. | DESCRIZIONE | DESCRIPTION |
|---|---|---|---|
| **7** | AML.05272 | Pianale DD2 (mod.KT4) | Floor tray DD2 (mod.KT4) |
| **8** | AML.01507 | Pianale Road Rebel/ DD2 | Floor tray Road Rebel/ DD2 |
| **9** | AML.01254 | Pianale KT4 CRG | Floor tray KT4 CRG |
| **10** | AML.02523 | Pianale Tork FS4 | Floor tray Tork FS4 |
| **11** | AML.00574 | Pianale KT2 | Floor tray KT2 |
| **12** | AML.04209 | Pianale Heron | Floor tray Heron |
| **13** | AML.06896 | Pianale KT2/R | Floor tray Kt2/R |
| **14** | FAN.02256 | Pianale estensione | Extention floor tray |
| **15** | AFS.00258 | Gommino pianale | Floor tray rubber |
| **16** | AFS.00261 | Vite testa tonda larga M 6x16 pianale | Floor tray large head screw M 6x16 |

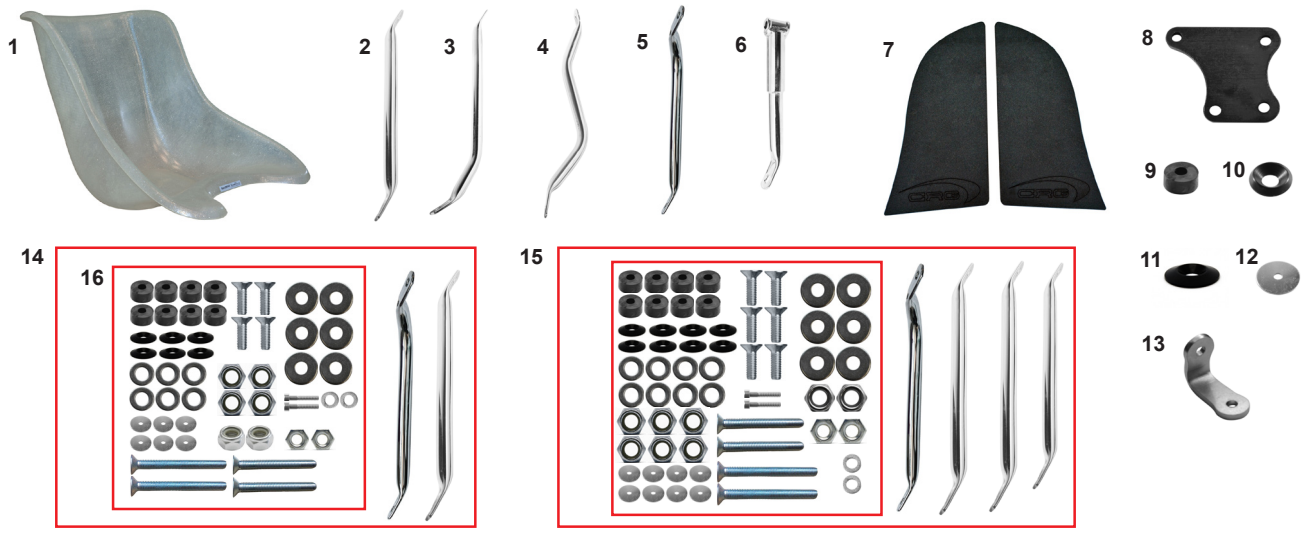


| ES | COD. | DESCRIZIONE | DESCRIPTION |
|---|---|---|---|
| 1 | AFS.05856.PUFFO | Sedile resina MT W1 PUFFO 23 CRG | Resin seat MT W1 PUFFO 23 CRG |
| 1 | AFS.05856.MINIXXS | Sedile resina MT W1 MINI 25 CRG | Resin seat MT W1 MINI 25 CRG |
| 1 | AFS.05856.MINIXS | Sedile resina MT W1 MINI 27,5 CRG | Resin seat MT W1 MINI 27, CRG |
| 1 | AFS.05856.TG00 | Sedile resina MT W1 CRG 30 | Resin seat MT W1 CRG 30 |
| 1 | AFS.05856.TG01 | Sedile resina MT W1 CRG 31 | Resin seat MT W1 CRG 31 |
| 1 | AFS.05856.TG02 | Sedile resina MT W1 CRG 32 | Resin seat MT W1 CRG 32 |
| 1 | AFS.05856.TG03 | Sedile resina MT W1 CRG 33 | Resin seat MT W1 CRG 33 |
| 1 | AFS.05856.TG04 | Sedile resina MT W1 CRG 34 | Resin seat MT W1 CRG 34 |
| 1 | AFS.05856.TG05 | Sedile resina MT W1 CRG 35 | Resin seat MT W1 CRG 35 |
| 2 | FC0.01390 | Rinforzo sedile 26 diritto | Straight seat support 26 |
| 2 | FC0.01391 | Rinforzo sedile 28 diritto | Straight seat support 28 |
| 2 | FC0.01392 | Rinforzo sedile 30 diritto | Straight seat support 30 |
| 2 | FC0.01393 | Rinforzo sedile 32 diritto | Straight seat support 32 |
| 2 | FC0.01394 | Rinforzo sedile 34 diritto | Straight seat support 34 |
| 2 | FC0.00751 | Rinforzo sedile 36 diritto | Straight seat support 36 |
| 3 | FC0.01389 | Rinforzo sedile 32 curvo | Curved seat support 32 |
| 3 | FC0.01388 | Rinforzo sedile 36 curvo | Curved seat support 36 |
| 4 | FC0.01006 | Rinforzo sedile 32 max destro | Max seat support right side 32 |
| 5 | FC0.01028 | Rinforzo sedile 28 sotto marmitta KZ | Seat support 28 under KZ muffler |
| 6 | FC0.05548 | Rinforzo sedile 18 DD2 dx | DD2 seat support rh 18 |
| 6 | FC0.01879 | Rinforzo sedile 21 DD2 dx | DD2 seat support rh 21 |
| 7 | AFS.03707 | Spugna sedile laterale CRG (coppia) | CRG side seat sponge (pairs) |
| 8 | SAN.02412 | Piastra supporto rinforzo sedile destro | Right seat reinforcement support plate |
| 9 | AFS.04662 | Spessore sedile 10-27x14 Nylon | Seat lining 10-27x14 Nylon |
| 10 | SAN.00146 | Rondella 8 svasata nera | Washer 8 countersunk black |
| 11 | FAN.00260 | Rondella 8 sedile alluminio nera | Aluminum seat washer black 8 |
| 12 | AML.04764 | Rondella 8,5-46x2 sedile CIK | Seat washer 8,5-46x2 CIK |
| 13 | SZ0.05082 | Supporto sedile mini | Seat support mini |
| 14 | FK0.06749.REPCKF | Kit montaggio sedile KF | Seat mounting kit KF |
| 15 | FK0.06749.REPCKZ | Kit montaggio sedile KZ | Seat mounting kit KZ |
| 16 | FKN.00259.REPCKF | Kit bulloneria fix sedile KF | Seat fixing bolts kit KF |
| 17 | FKN.00259.REPCKZ | Kit bulloneria fix sedile KZ | Seat fixing bolts kit KZ |

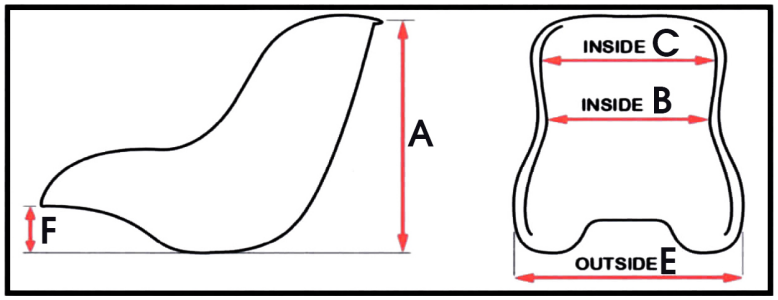


| TG. | A | F | B | C | E |
|---|---|---|---|---|---|
| Puffo | 26 | 7 | 23 | 26 | 37,5 |
| Mini | 30,5 | 7,5 | 26,5 | 30 | 41 |
| 00 | 32,5 | 10 | 30 | 36,5 | 44 |
| 01 | 32,5 | 10 | 31 | 37,5 | 45 |
| 02 | 33,5 | 9,5 | 32 | 36,5 | 46 |
| 03 | 33,5 | 9,5 | 33 | 39,5 | 46 |
| 04 | 33,5 | 7 | 34 | 36,5 | 49 |
| 05 | 33,5 | 7 | 35 | 37 | 49,5 |

# PIASTRE MOTORE - ENGINE MOUNT

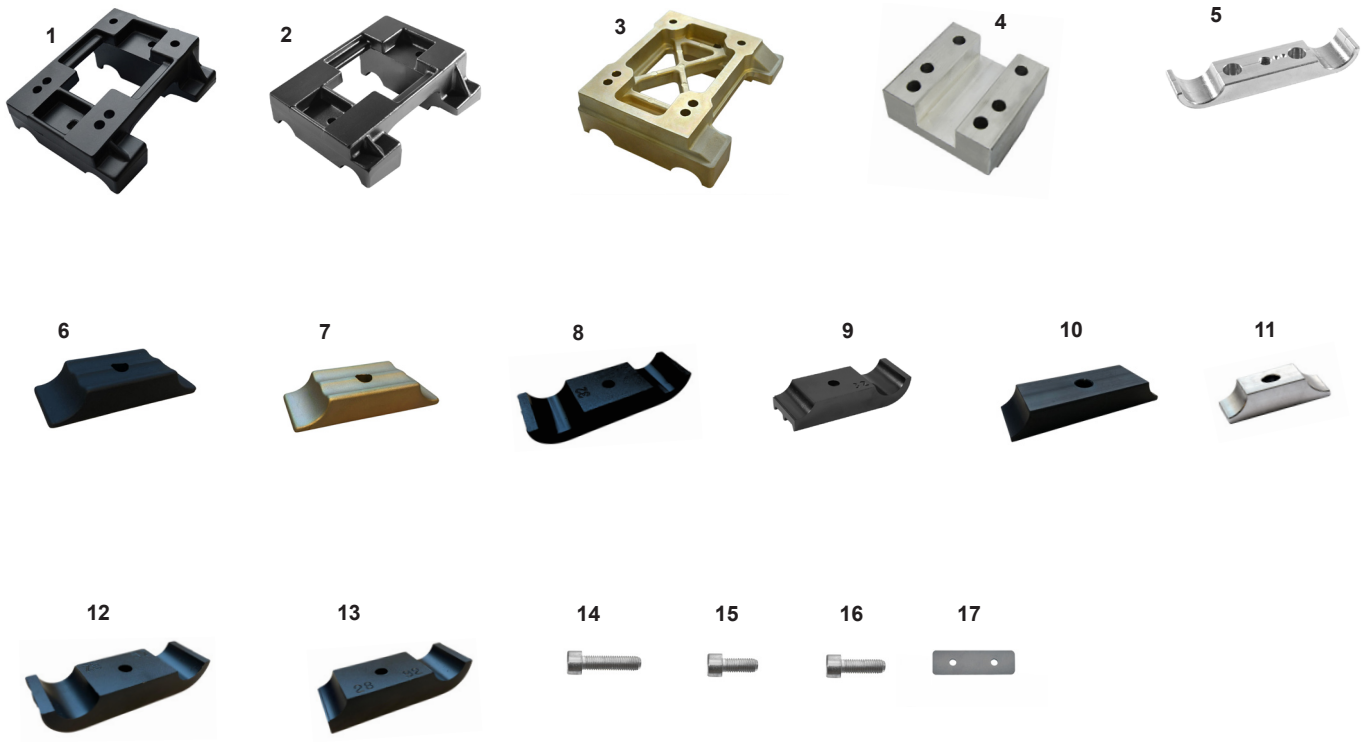


| ES COD. | DESCRIZIONE | DESCRIPTION |
|---|---|---|
| **1** FFN.00899 | Piastra motore 30 mg forata CRG incl. | Engine mount magnesium 30 CRG incl. |
| **1** FFN.00072 | Piastra motore 32 mg forata CRG | Engine mount magnesium 32 CRG |
| **2** FFN.00899NOFORI | Piastra motore 30 mg no fori Rotax-X30 | Engine mount no holes magn. 30 Rotax-X30 |
| **3** AFS.06300 | Pias. mot. 30 Mg CRG Rot./X30/lame OK | Eng. mount 30 Mg CRG Rot./X30/lame OK |
| **4** FL1.01471 | Piastra motore alluminio Puffo Comer | Comer engine mount Puffo aluminum |
| **5** FK0.03264 | Supp. motore post. compl. DD2 30/32+2 | Rear DD2 engine mount complete 30/32+2 |
| **6** SAN.06449 | Cavallotto motore corto alluminio nero | Engine mount clamp aluminium short black |
| **7** SAG.06449 | Cavallotto motore corto alluminio oro | Engine mount clamp aluminium short gold |
| **8** FFN.00074 | Cavallotto motore 32 mg | Engine mount clamp 32 mg |
| **7** FFN./0074 | Cavallotto motore 32 mg smussato | Engine mount clamp rounded 32 mg |
| **8** FVO.00074 | Cavallotto motore mg 32 nero opaco | Engine mount bracket mg CRG 32 |
| **9** FVO./0074 | Cavallotto motore mg 32 nero op. smussato | Engine mount bracket mg CRG 32 rounded |
| **10** SAN.02885 | Cavallotto motore DD2 32 alluminio | Engine mount clamp DD2 32 aluminum |
| **11** FL1.01437 | Cavallotto motore Comer alluminio | Engine mount aluminum Comer |
| **12** FFN.01820 | Cavallotto motore mg int 92 28 cadet | Engine mount bracket mg 28 92 cadet |
| **13** FFN./1820 | Cavallotto mot. mg int 92 28 cadet smussato | Engine mount bracket mg 28 92 cad. rounded |
| **14** AFN.02844 | Vite M10x25 cilindrica | M 10x25 socket head screw |
| **15** AFN.04565 | Vite M10x35 cilindrica | M 10x35 socket head screw |
| **16** AFN.00279 | Vite M10x40 cilindrica | M 10x40 socket head screw |
| **17** SZ0.00974 | Piastrina sottomotore DD2 | Engine mount plate DD2 |

A

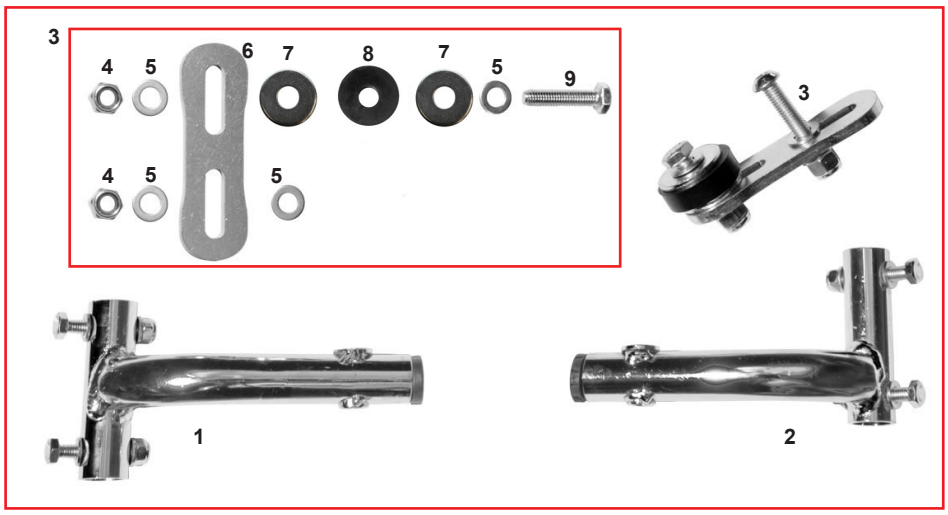


B

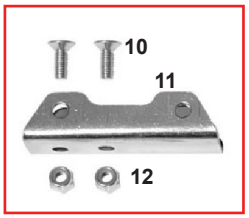


C

| ES | COD. | DESCRIZIONE | DESCRIPTION |
|---|---|---|---|
| **A** | FM0.01824 | Supporto marmitta Rotax completo | Rotax exhaust support complete |
| **B** | FK0.01823 | Attacco supporto marmitta completo | Exhaust support clamp complete |
| **C** | FKN.05121 | Kit supporti marmitta DD2 Ø30 | Exhaust support kit DD2 Ø30 |
| | FKN.05122 | Kit supporti marmitta DD2 Ø32 | Exhaust support kit DD2 Ø32 |
| | FKN.05617 | Kit supporti marmitta DD2 Ø30/32 | Exhaust support kit DD2 Ø30/32 |
| **1** | FM0.1824S | Supporto marmitta sx freno completo | Exhaust support lf brake side complete |
| **2** | FM0.1824D | Supporto marmitta dx motore completo | Exhaust support rh engine complete |
| **3** | FK0.01994 | Kit piastrina marmitta Rotax dx-sx | Exhaust support Rotax mini kit L/R |
| **4** | AFN.00128 | Dado M8 autoblock alto | Nut M8 high self-locking |
| **5** | AFN.00350 | Rondella 8,5-16x1,5 | Washer 8,5-16x1,5 |
| **6** | SZ0.01535 | Piastrina supporto marmitta Rotax | Exhaust support Rotax |
| **7** | AFN.00125 | Rondella 10,5-30x2,5 | Washer 10,5-30x2,5 |
| **8** | AFS.00088 | Gommino culla marmitta | Exhaust cradle rubber |
| **9** | AFN.00910 | Vite M 8x40 esagonale | M 8x40 hexagonal head screw |
| **10** | TSV.06X014 | Vite M 6x14 svasata | M 6x14 countersunk head screw |
| **11** | FC0.01823 | Attacco supporto marmitta Rotax cromato | Chromed Rotax muffler support attachment |
| **12** | AFN.00264 | Dado M 6 autoblock alto | Nut M 6 high self-locking |
| **13** | FM0.02193 | Culla marmitta mini completa | Exhaust cradle mini complete |
| | SC0.06432 | Culla marmitta | Exhaust cradle |
| | AFS.00088 | Gommino culla marmitta | Exhaust cradle rubber |
| | SZ0.00122 | Molla culla marmitta 10,5 std | Exhaust cradle spring 10,5 std |
| | AFN.00125 | Rondella 10,5-30x2,5 | Washer 10,5-30x2,5 |
| | AFN.00127 | Vite M 8x55 bombata | M 8x55 convex head screw |
| | AFN.00128 | Dado M8 autobloccante alto | Nut M8 high self-locking |
| | AFN.00350 | Rondella 8,5-16x1,5 | Washer 8,5-16x1,5 |
| | AFN.02098 | Vite M 8x45 bombata | M 8x45 convex head screw |
| **14** | FM0.00121 | Supporto culla marmitta DD completo | Exhaust cradle support DD complete |
| **15** | FAN.00983 | Piastra estensione culla | Exhaust cradle extension |
| **16** | SZ0.01537 | Piastrina supporto marmitta curva | Exhaust support (curved) |

A

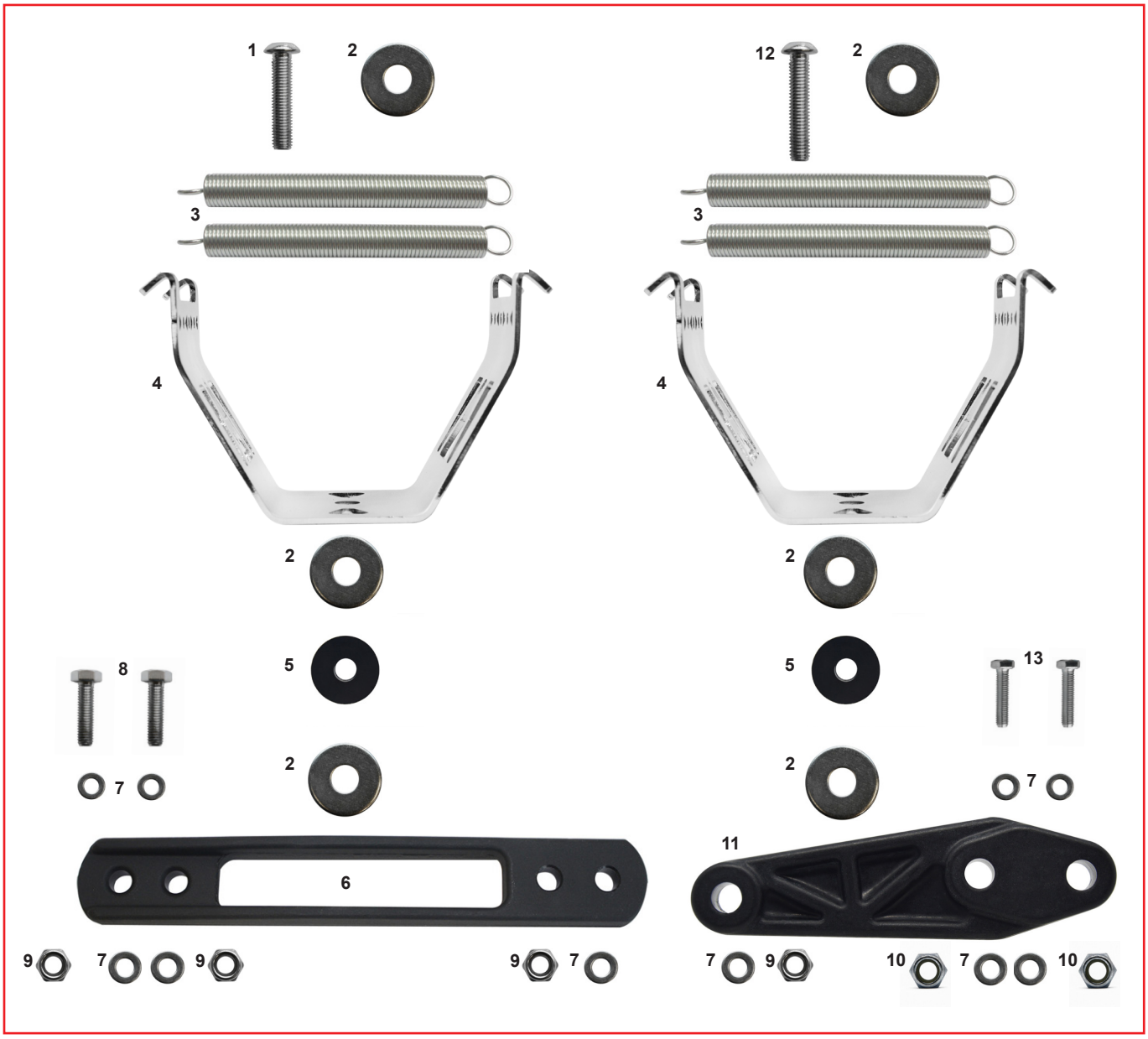


| ES | COD. | DESCRIZIONE | DESCRIPTION |
|---|---|---|---|
| **A** | FM0.03741 | Supporto marmitta KZ completo | Exhaust support KZ complete |
| **1** | AFN.00266 | Vite M 8x40 bombata | M 8x40 covex head screw |
| **2** | AFN.00125 | Rondella 10,5-30x2,5 | Washer 10,5-30x2,5 |
| **3** | SZ0.00122 | Molla culla marmitta 10,5 std | Exhaust cradle spring 10,5 std |
| **4** | SC0.06432 | Culla marmitta | Cradle spring |
| **5** | AFS.00088 | Gommino culla marmitta | Exhaust cradle rubber |
| **6** | SAN.02857 | Supporto culla silenziatore | Exhaust cradle support black |
| **7** | AFN.00350 | Rondella 8-16x1,5 | Washer 8-16x1,5 |
| **8** | AFN.00307 | Vite M8x30 esagonale | M8x30 hexagonal head screw |
| **9** | AFN.00128 | Dado M8 autoblock alto | Nut M8 high self-locking |
| **10** | AFN.00160 | Dado M8 autoblock basso | Nut M8 low self-locking |
| **11** | FAN.00983 | Piastra estensione culla | Extension for cradle |
| **12** | AFN.02098 | Vite M 8x45 bombata | M 8x45 convex head screw |
| **13** | AFN.00349 | Vite M 8x35 esagonale | M 8x35 hexagonal head screw |

A

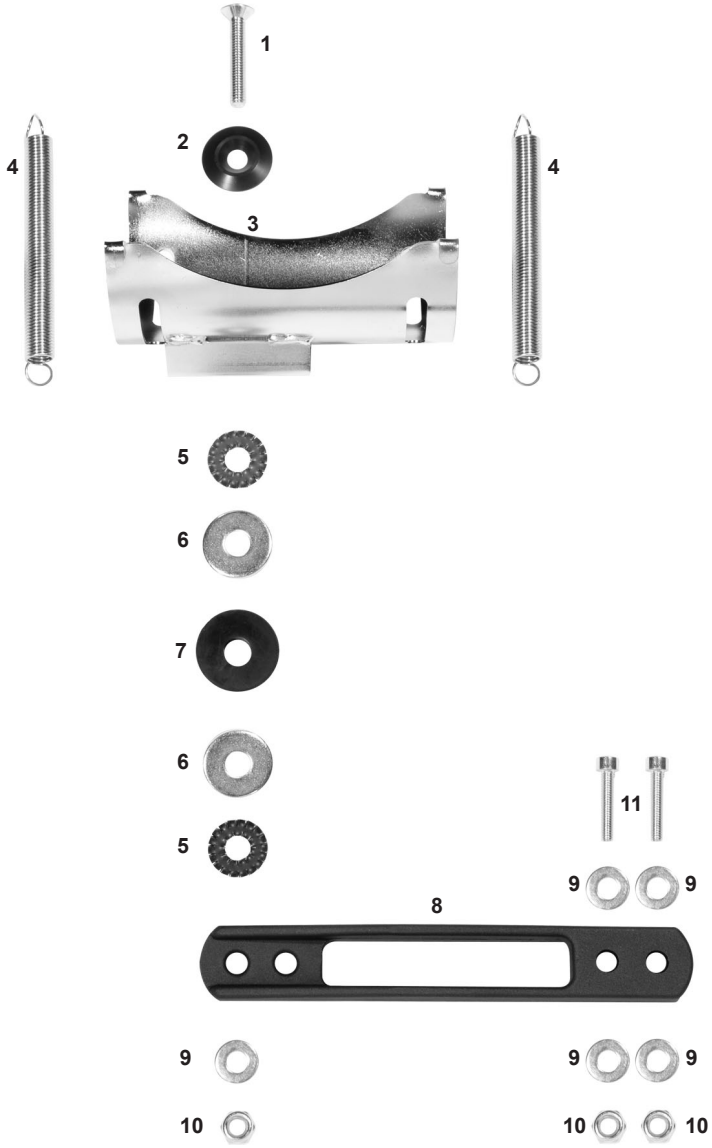


| ES | COD. | DESCRIZIONE | DESCRIPTION |
|---|---|---|---|
| **A** | FM0.02890 | Supp. marmitta KZ completo (mod. eco) | Exhaust supp. KZ compl. (easy model) |
| **1** | AFN.00291 | Vite M 8x45 svasata | M 8x45 countersunk head screw |
| **2** | FAN.00260 | Rondella 8 sedile alluminio nera | Aluminum seat washer 8 black |
| **3** | SC0.02890 | Culla marmitta D100 KZ | Exhaust cradle D100 KZ |
| **4** | SZ0.00122 | Molla culla marmitta 10,5 std | Exhaust cradle spring 10,5 std |
| **5** | AFN.00541 | Rondella 10-26 dentellata int./est. | Cog washer 10-26 int./ext. |
| **6** | AFN.00125 | Rondella 10,5-30x2,5 | Washer 10,5-30x2,5 |
| **7** | AFS.00088 | Gommino culla marmitta | Exhaust cradle rubber |
| **8** | SAN.02857 | Supporto culla silenziatore | Exhaust cradle support black |
| **9** | AFN.00350 | Rondella 8,5-16x1,5 | Washer 8,5-16x1,5 |
| **10** | AFN.00160 | Dado M8 autoblock basso | Nut M8 low self-locking |
| **11** | AFN.00827 | Vite M 8x30 cilindrica | M 8x30 socket head screw |

1

2

3

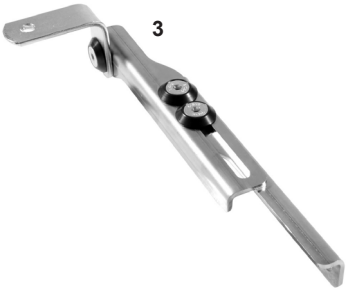

4

5

6

7

| ES | COD. | DESCRIZIONE | DESCRIPTION |
|---|---|---|---|
| **1** | FMG.02463 | Radiatore racing tendina completa oro | Racing radiator assy with curtain gold compl. |
| **2** | FMG.05083 | Radiatore racing T-Light supp. compl. N.L. | Radiator T-Light support kit NewLine gold |
| **3** | FK0.00021 | Supporto radiatore DD2 supp. completo | DD2 radiator support top complete |
| **4** | SC0.01700 | Supporto radiatore DD2 inferiore | Lower DD2 radiator support |
| **5** | AFS.04128 | Tappo radiatore NewLine alluminio oro | Radiator aluminum cap NewLine gold |
| **6** | AFS.04129 | Kit staffe radiatore NewLine oro | Radiator support kit NewLine gold |
| **7** | AFS.02464 | Tendina radiatore NewLine nera | Radiator curtain NewLine black |

A

1

2

3

4

5

6

7

8

9

| ES | COD. | DESCRIZIONE | DESCRIPTION |
|---|---|---|---|
| **A** | FM0.05823 | Pompa acqua 2.0 crg nera completa | Water pump 2.0 complete |
| **1** | AFN.00776 | Fascetta acciaio 16-25 radiatore | Radiator water clip 16-25 |
| **2** | AFS.00723 | Raccordo T valvola termostatica | Thermostatic valve T fitting |
| **3** | FAN.01130 | Raccordo sonda acqua | Water sensor connection |
| **4** | FAG.01662 | Puleggia 50 pompa acqua std oro | Water pump pulley std 50 gold |
| **5** | AFN.00289 | Grano M 6x6 cuscinetto | Grub screw M 6x6 axle bearing |
| **6** | AFS.01672 | Cinghia dentata 140 barra diritta | Water driving belt 140 straight bar |
| **6** | AFS.02769 | Cinghia dentata 150 barra diritta | Water driving belt 150 straight bar |
| **6** | AFS.01640 | Cinghia dentata 160 barra inclinata | Water driving belt 160 curved bar |
| **7** | AMS.00784 | Tubo valvola termostato | Thermic valve pipe |
| **8** | AFS.00761 | Tubo acqua curvo | Curved water pipe |
| **9** | SL1.00767 | Puleggia pompa acqua piccola | Water pump pulley small |

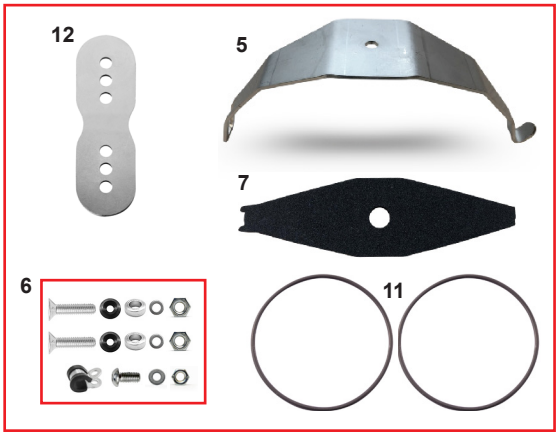


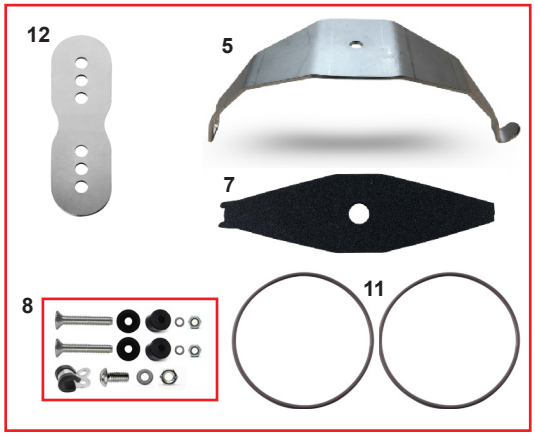


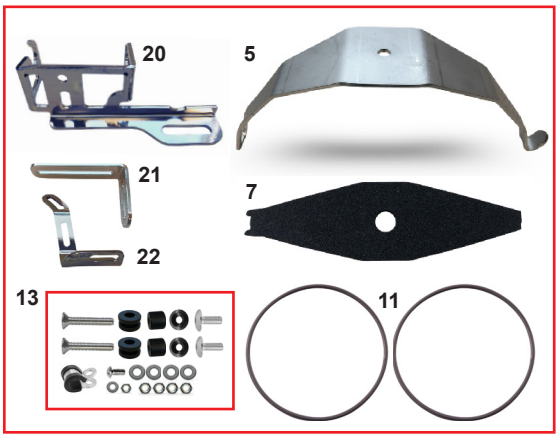


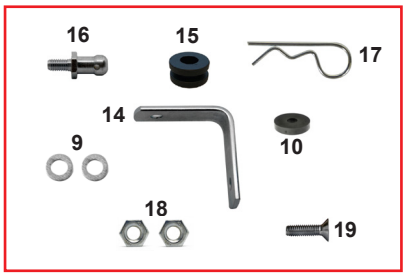

| ES | COD. | DESCRIZIONE | DESCRIPTION |
|---|---|---|---|
| 1 | AFS.00988 | Convogliatore plastica | Brake duct |
| 2 | AFN.00955 | Fascetta acciaio 50-70 filtro | Air filter clip 50-70 |
| 3 | AFS.03875 | Filtro aria nitro 30 KZ 8/SA/24 argento | Air filter nitro 30 KZ 8/SA/24 silver |
| 3 | AFS.04585 | Filtro aria nitro 23 KF 8/SA/24 argento | Air filter nitro 23 KF 8/SA/24 silver |
| 4 | SC0.01962 | Supporto filtro lame | lame air filter support |
| A | FK0.01936 | Kit supporto filtro aria KF | Air filter support kit KF |
| B | FK0.01933 | Kit supporto filtro aria KZ | Air filter support kit KZ |
| C | FK0.06877 | Kit supporto filtro aria MINI | Air filter support kit MINI |
| 5 | AML.01933 | Supporto filtro aria | Air filter support |
| 6 | PMV.FILTRO.OK | Kit viti montaggio filtro aria OK | Screw mounting kit air filter OK |
| 7 | AFS.01935 | Spugna adesiva supporto filtro | Sticker sponge for filter support |
| 8 | PMV.FILTRO.KZ | Kit viti montaggio filtro aria KZ | Screw mounting kit air filter KZ |
| 9 | AFN.00105 | Rondella 6,5-12x1,5 | Washer 6,5-12x1,5 |
| 10 | AFS.00258 | Gommino pianale | Floor tray rubber |
| 11 | AFN.00248 | Cinghiolo pompa acqua | Water pump driving belt |
| 12 | SC0.01934 | Piastrina supporto filtro KZ/KF | Plate filter support KZ/KF |
| 13 | PMV.FILTRO.MINI | Kit viti montaggio filtro aria MINI | Screw mounting kit air filter MINI |
| D | FK0.02317 | Piastrina supporto filtro DD2 completo | Plate filter support DD2 assy complete |
| 14 | SZ0.02317 | Piastrina supporto filtro DD2 | Plate filter support DD2 |
| 15 | AFS.04522 | Gommino supporto frontalino KG | KG front fairing rubber |
| 16 | SBN.00103 | Perno supporto frontalino inferiore | Front fairing support pivot |
| 17 | SZ0.00102 | Spina elastica supporto frontalino | Front fairing elastic pin |
| 18 | AFN.00106 | Dado M6 autoblock basso | Nut M6 low self-locking |
| 19 | AFN.00261 | Vite M6x20 svasata | M6x20 countersunk head screw |
| 20 | SC0.06857 | Supporto filtro benzina Mini Racing | Fuel filter support Mini Racing |
| 21 | SC0.06858 | Supporto filtro aria Mini Racing parte 1 | Air filter support Mini Racing part 1 |
| 22 | SC0.06859 | Supporto filtro aria Mini Racing parte 2 | Air filter support Mini Racing part 2 |

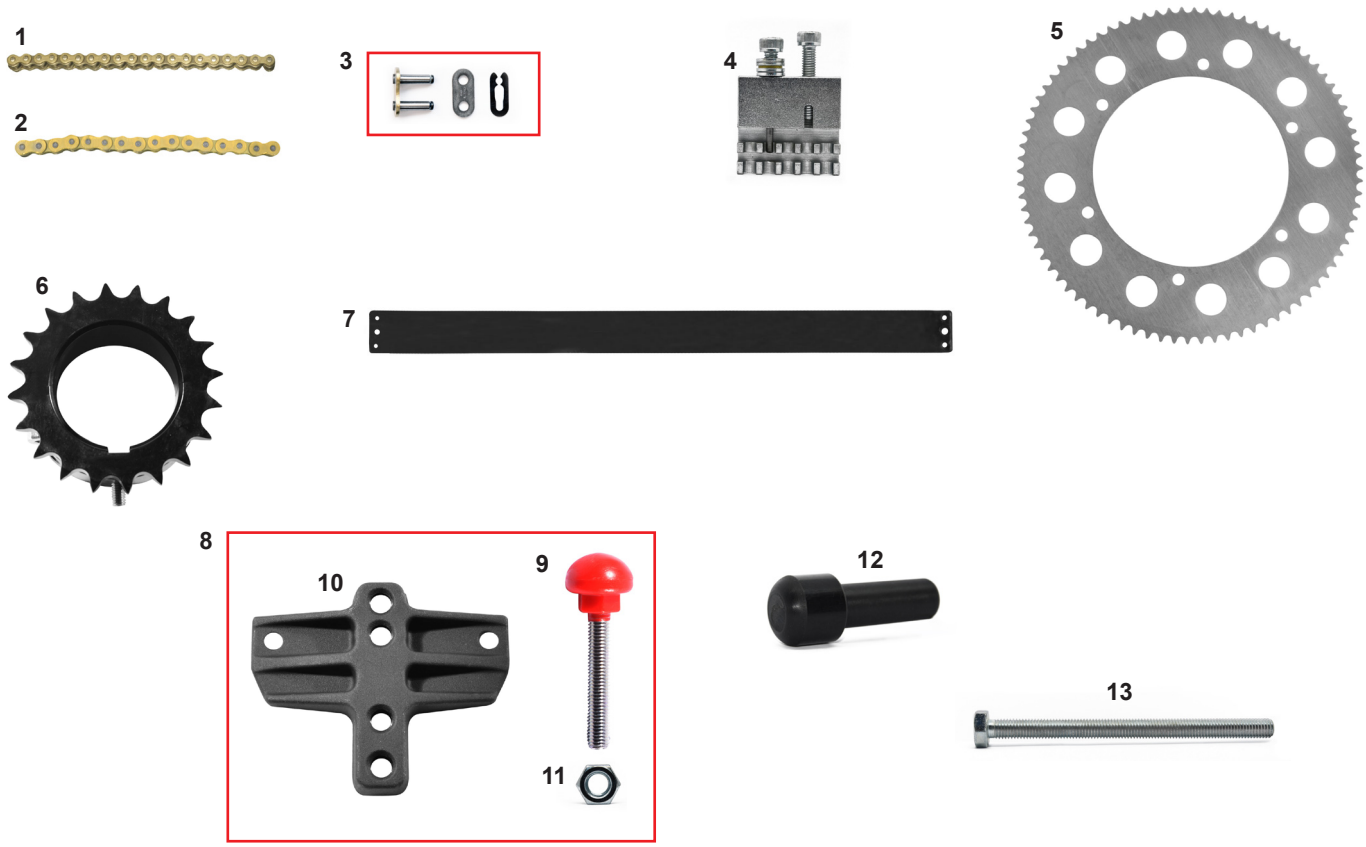


| ES | COD. | DESCRIZIONE | DESCRIPTION |
|---|---|---|---|
| 1 | AFS.00614 | Catena DD con or **misure da 98 a 114 | Chain DD with o-ring ** sizes from 98 to 114 |
| 2 | AMS.00671 | Catena KZ al metro | KZ chain per meter |
| 2 | AMS.02651 | Catena DD Puffo passo 219 (al mt) | DD chain Puffo 219 per meter |
| 3 | AMS.00779 | Maglia congiunzione catena KZ | Joining link for chain KZ |
| 3 | AMS.02652 | Maglia congiunzione catena Puffo | Joining link for chain Puffo |
| 4 | AFS.01121 | Smagliacatena | Chain linker tool |
| 5 | AFS.00171 | Corona DD **misure da 64 a 93 | Sprocket DD ** sizes from 64 to 93 |
| 5 | AFS.00506 | Corona Puffo | Sprocket Puffo |
| 6 | AFS.00797 | Corona KZ Ø50 Ergal (misure da 20 a 30) | Ergal ring gear KZ Ø50 (sizes from 20 to 30) |
| 7 | AFS.00338 | Paracatena dritto KZ | Straight chain guard KZ |
| 8 | FMN.00298 | Tendicatena forgiato nero completo | Chain tightener forged black complete |
| 9 | AFS.00254 | Vite tendicatena M10 (pomolo rosso) | Chain tightener screw M10 (red knob) |
| 10 | SAN.00298 | Tendicatena forgiato nero | Forged chain tightener black |
| 11 | AFN.00255 | Dado M10 | Nut M10 |
| 12 | SL1.05697 | Tappo tendicatena mini | Mini chain tensioner cap |
| 13 | AFN.02820 | Vite M10x140 esagonale | M10x140 hexagonal head screw |

A

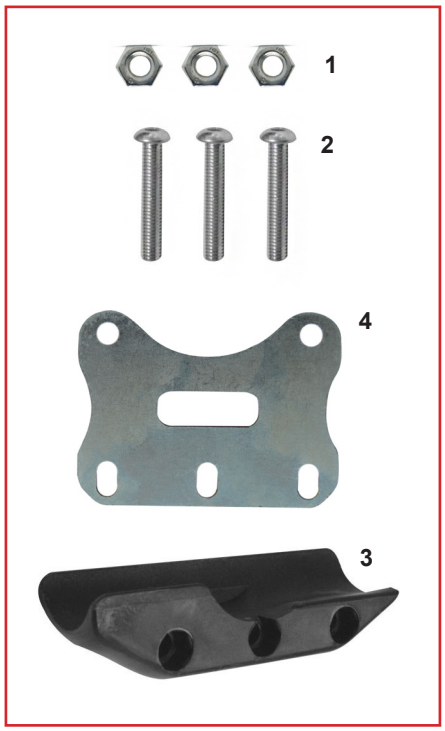


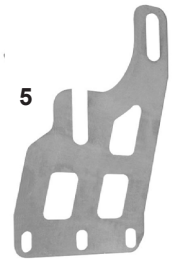

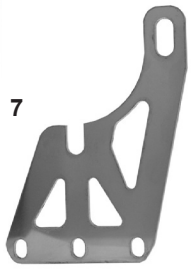

| ES | COD. | DESCRIZIONE | DESCRIPTION |
|---|---|---|---|
| **A** | FK0.04949 | Kit ripara disco CRG GLM | Rear brake disc guard kit CRG GLM |
| **1** | AFN.00106 | Dado M6 autoblock basso | Nut M 6 low self-locking |
| **2** | AFN.01984 | Vite M 6x35 bombata | M 6x35 convex head screw |
| **3** | AFS.01632 | Salva disco plastica CRG | Plastic disc protection CRG |
| **4** | SZ0.04949 | Supporto salvadisco CRG GLM | CRG disc guard support GLM |
| **5** | SZ0.01629 | Supporto salvadisco CRG | Disc protection support CRG |
| **6** | SZ0.02872 | Supporto salvadisco +5 +10 | Disc protection support +5 +10 |
| **7** | SZ0.03437 | Supporto salvadisco CRG | Disc protection support CRG |
| **8** | SZ0.04518 | Supporto salvadisco Mini Heros FFSA | Disc protection support Mini Heros FFSA |

# KIT PARACATENA - CHAIN PROTECTION KIT

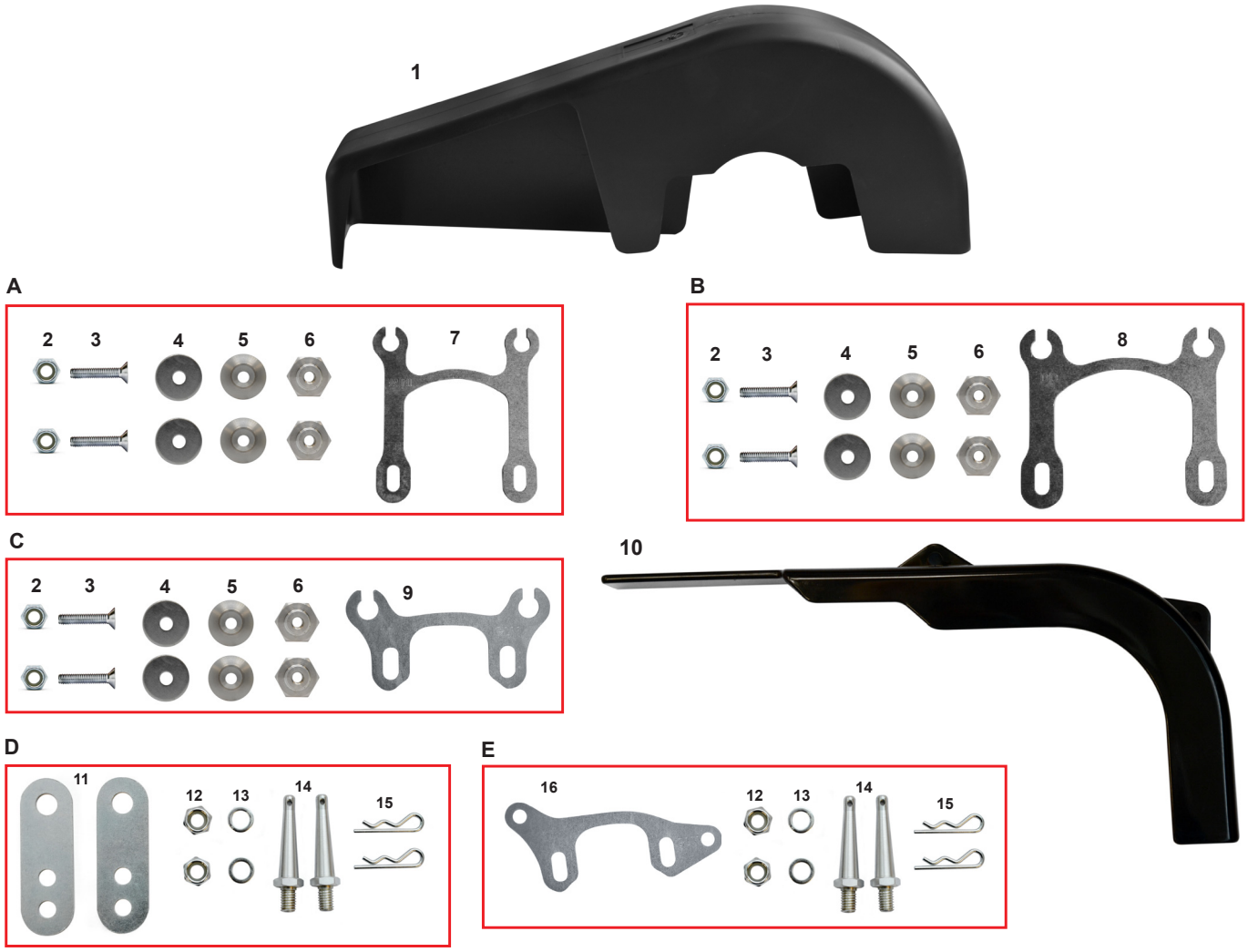


| ES | COD. | DESCRIZIONE | DESCRIPTION |
|---|---|---|---|
| 1 | AFS.04390 | Paracatena DD integrale | Integral chain guard DD |
| A | FK0.04338 | Kit attacchi paracatena integrale mini | Chain guard support kit integral mini |
| B | FK0.04337 | Kit attacchi paracatena integrale ibrido light | Chain guard support kit light hybrid |
| C | FK0.05001 | Kit attacchi paracatena DD GLM | Chain guard support kit DD GLM |
| 2 | AFN.00264 | Dado M6 autoblock alto | Nut M6 high self-locking |
| 3 | AFN.00499 | Vite M 6x30 svasata | M 6x30 contersunk head screw |
| 4 | AFN.01447 | Rondella 6,5-24X2 | Washer 6,5-24x2 |
| 5 | SL1.04336 | Rondella M6 svasata larga | Washer M6 contersunk large |
| 6 | SL1.04326 | Dado supporto paracatena integrale | Chain guard support nut integral |
| 7 | FZ0.04338 | Supporto paracatena integrale mini | Chain guard support mini integral |
| 8 | FZ0.04337 | Supporto paracatena integrale ibrido light | Chain guard support light hybrid integral |
| 9 | FZ0.05001 | Supporto paracatena DD GLM | Chain guard support DD GLM |
| 10 | AFS.04577 | Paracatena KZ sgancio rapido | KZ chain guard rapid release |
| D | FK0.04933 | Kit attacchi paracatena KZ sgancio rapido | Chain guard clamps kit KZ fast release |
| E | FK0.05003 | Kit attacchi parac. KZ GLM sgancio rapido | Chain guard clamps kit KZ GLM fast release |
| 11 | SZ0.04811 | Piastrina attacco paracatena KZ RR | Chain guard connection plate KZ RR |
| 12 | AFN.00160 | Dado M8 autoblock basso | Nut M8 low self-locking |
| 13 | AFN.00350 | Rondella 8,5-16x1,5 | Washer 8,5-16x1,5 |
| 14 | SL1.04823 | Perno paracatena KZ RR neutro | Chain guard pivot KZ RR neutral |
| 15 | SZ0.00102 | Spina elastica supporto frontalino | Front fairing elastic pin |
| 16 | FZ0.05003 | Supporto parac. KZ GLM sgancio rapido | Chain guard support KZ GLM fast release |
| OPZ. | SZ0.05065 | Piastrina attacco paracatena KZ RR 75mm | Chain guard connection plate KZ 75mm |
| | SZ0.05066 | Piastrina attacco paracatena KZ RR 90mm | Chain guard connection plate KZ 90mm |

A

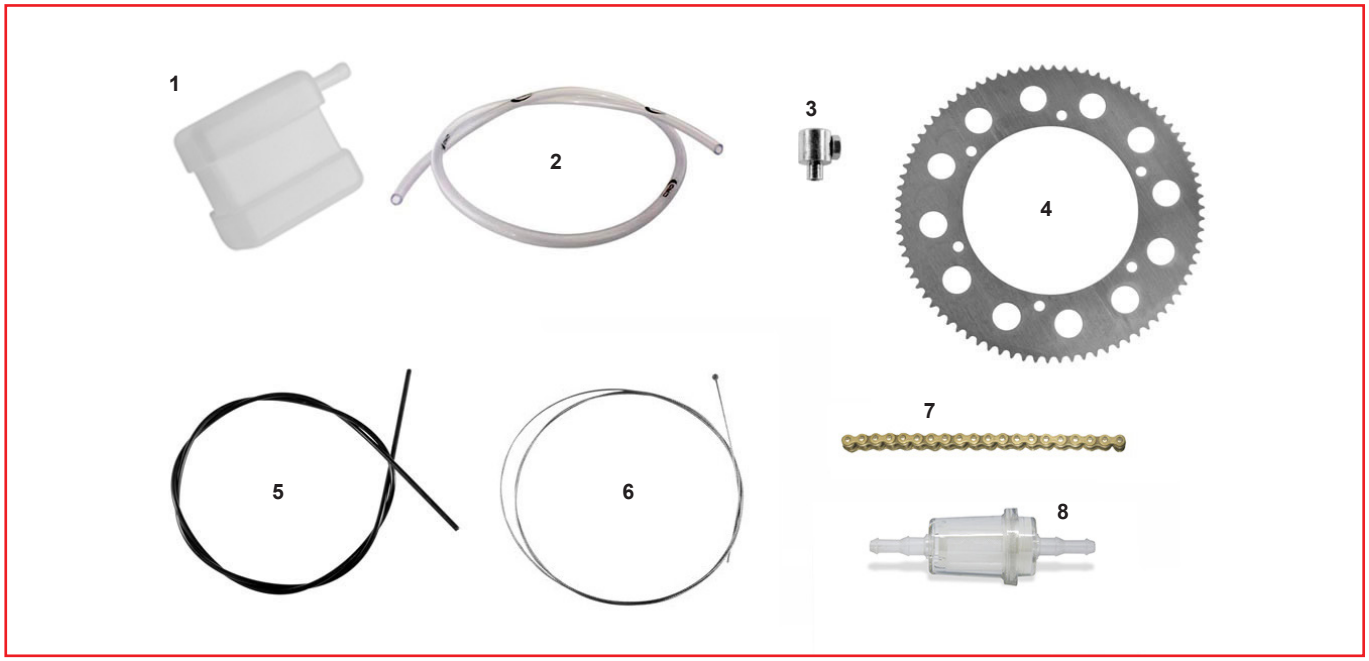


| ES | COD. | DESCRIZIONE | DESCRIPTION |
|---|---|---|---|
| **A** | CRG.50005 | Prontogara mini-baby | Ready to race mini-baby |

| ES | COD. | DESCRIZIONE | DESCRIPTION | Q.TÀ |
|---|---|---|---|---|
| **1** | AFS.00753 | Tanica recupero | Recovery tank | 1 |
| **2** | AMS.00139 | Tubo benzina al metro | Fuel pipe per meter | 1,5 |
| **3** | AFS.00514 | Morsetto filo | Cable clamp | 1 |
| **4** | AFS.0017182 | Corona KF 219 Z82 | Sprocket KF 219 Z82 | 1 |
| **5** | AMS.01370 | Guaina filo Ø5 gas std | Outer cable Ø5 for gas cable | 1 |
| **6** | AFS.00515 | Filo gas | Gas cable | 1 |
| **7** | AFS.00614106 | Catena 106M KF con OR | Chain 106 KF with OR | 1 |
| **8** | AFS.01016 | Filtro benzina RR | RR fuel filter | 1 |

# OK KIT PRONTO GARA - READY TO RACE KIT

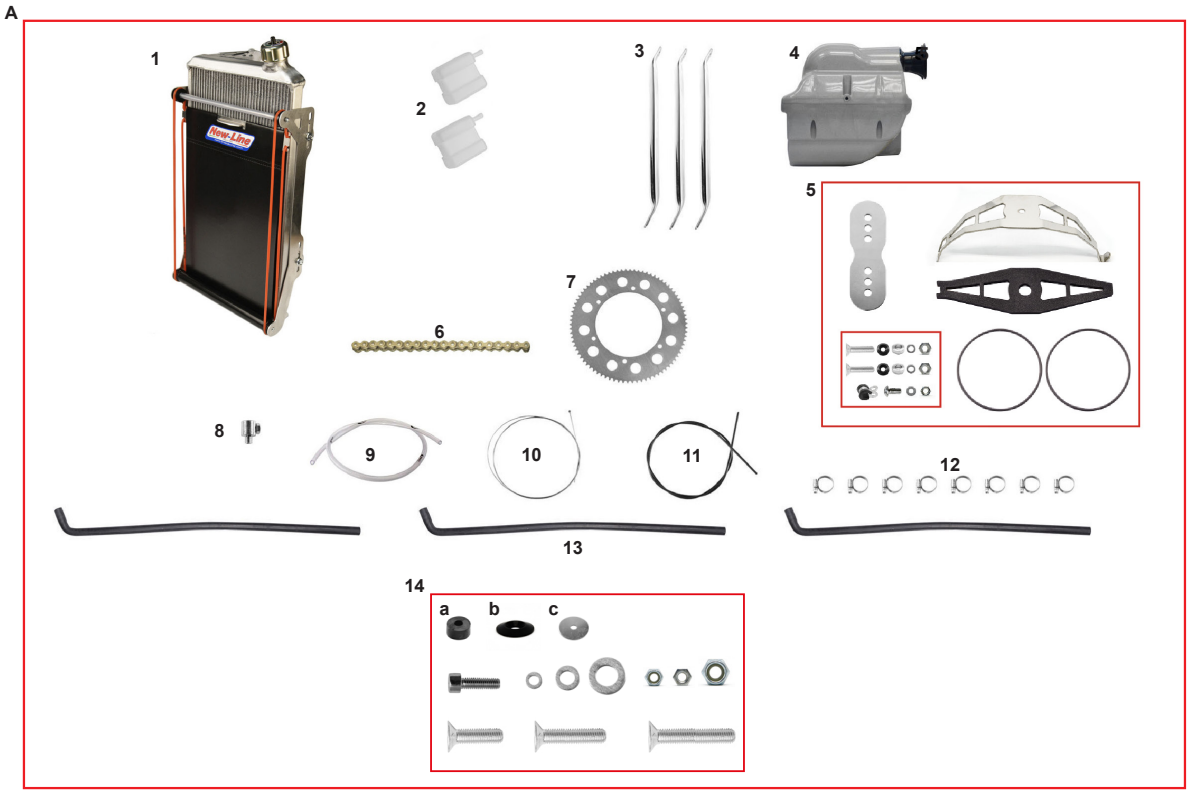


| ES | COD. | DESCRIZIONE | DESCRIPTION |
|---|---|---|---|
| **A** | CRG.50001 | Prontogara OK-OKJ | OK-OKJ ready to race |

| ES | COD. | DESCRIZIONE | DESCRIPTION | Q.TÀ |
|---|---|---|---|---|
| **1** | FMG.05083 | Radiatore racing T-Light supp. compl. N.L. | Racing radiator T-Light complete support NewLine | 1 |
| **2** | AFS.00753 | Tanica recupero | Recovery tank | 2 |
| **3** | FC0.01391 | Rinforzo sedile 28 diritto | Straight seat support 28 | 1 |
| | FC0.01392 | Rinforzo sedile 30 diritto | Straight seat support 30 | 1 |
| **4** | AFS.04585 | Filtro aria nitro Ø23 KF 8/SA/24 argento | Air filter nitro Ø23 KF 8/SA/24 silver | 1 |
| **5** | FK0.01936 | Kit supporto filtro aria KF | Air filter support kit KF | 1 |
| **6** | AFS.00614108 | Catena 108M KF con O-ring | Chain 108M KF with O-ring | 1 |
| **7** | AFS.0017178 | Corona DD 219 Z78 | Sprocket DD 219 Z78 | 1 |
| **8** | AFS.00514 | Morsetto filo | Cable clamp | 1 |
| **9** | AMS.00139 | Tubo benzina al metro | Fuel pipe per meter | 1,5 |
| **10** | AFS.00515 | Filo gas | Gas cable | 1 |
| **11** | AMS.01370 | Guaina Ø5 filo gas | Outer cable Ø5 for gas cable | 0,7 |
| **12** | AFN.00776 | Fascetta acciaio 16-25 radiatore | Radiator steel band 16-25 | 8 |
| **13** | AFS.00761 | Tubo acqua curvo | Curved water pipe | 3 |
| **14** | FKN.00259 | Kit bulloneria fissaggio sedile OK | OK seat mounting kit | 1 |
| **a** | AFS.04662 | Spessore sedile 10-27x14 in nylon | Seat lining 10-27x14 nylon | 8 |
| **b** | FAN.00260 | Rondella 8 sedile alluminio nera | Aluminum seat washer black 8 | 8 |
| | AFN.02188 | Vite M8x70 svasata | M8x70 countersunk head screw | 2 |
| | AFN.00145 | Vite M8x25 svasata | M8x25 countersunk head screw | 6 |
| | AFN.00350 | Rondella 8,5-16x1,5 | Washer 8,5-16x1,5 | 8 |
| | AFN.00160 | Dado M8 autoblock basso | Nut M8 low self-locking | 6 |
| **c** | AFN.04764 | Rondella 8,5-46x2 sedile CIK | Washer 8,5-46x2 CIK seat | 8 |
| | AFN.00482 | Vite M8x80 svasata | M8x80 countersunk head screw | 2 |
| | AFN.00125 | Rondella 10,5-30x2,5 | Washer 10,5-30x2,5 | 6 |
| | AFN.00128 | Dado M8 autoblock alto | Nut M8 high self-locking | 2 |
| | AFN.00106 | Dado M6 autoblock basso | Nut M6 low self-locking | 2 |
| | AFN.00105 | Rondella 6,5-12x1,5 | Washer 6,5-12x1,5 | 2 |
| | AFN.00137 | Vite M6x35 cilindrica | M6x35 socket head screw | 2 |

# KZ KIT PRONTO GARA KZ - READY TO RACE KIT KZ

A

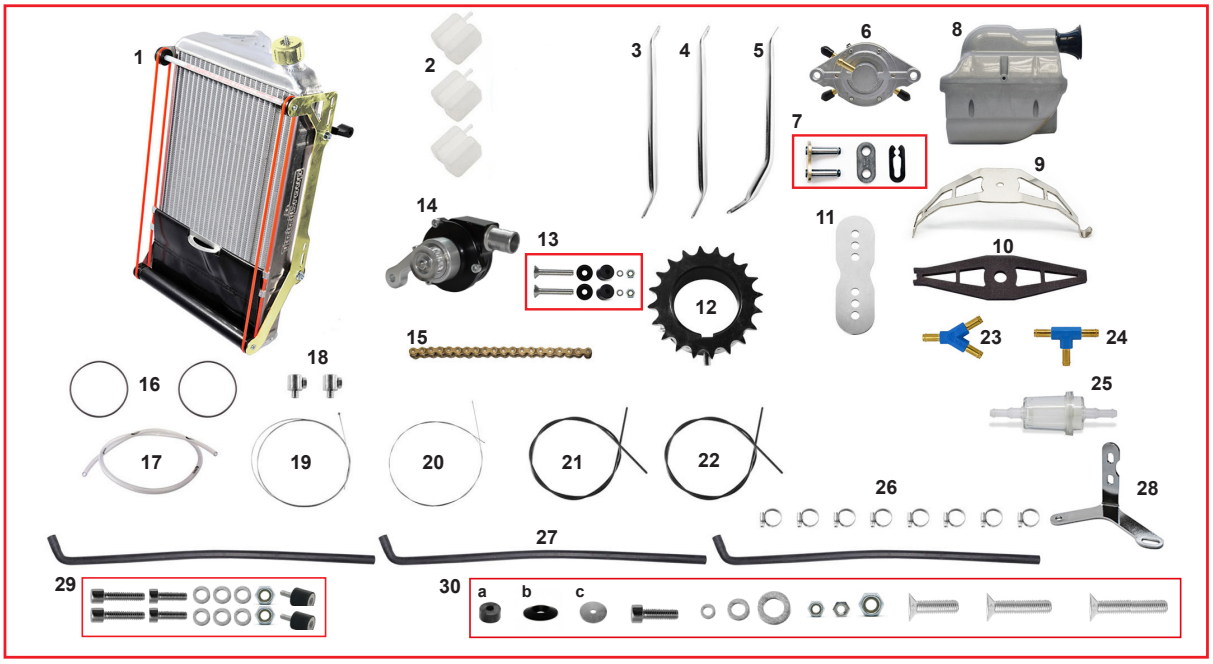


| ES | COD. | DESCRIZIONE | DESCRIPTION |
|---|---|---|---|
| **A** | CRG.50006 | Prontogara KZ | KZ ready to race |

| ES | COD. | DESCRIZIONE | DESCRIPTION | Q.TÀ |
|---|---|---|---|---|
| **1** | FMG.02463 | Radiatore racing tendina completo oro | Racing radiator assy complete with curtain gold | 1 |
| **2** | AFS.00753 | Tanica recupero | Recovery tank | 3 |
| **3** | FC0.01390 | Rinforzo sedile 26 diritto | Straight seat support 26 | 1 |
| **4** | FC0.01391 | Rinforzo sedile 28 diritto | Straight seat support 28 | 2 |
| **5** | FC0.01028 | Rinforzo sedile 28 sotto marmitta curvo KZ | Seat reinforcement 28 under KZ muffler | 1 |
| **6** | AFS.05044 | Pompa benzina doppia Mikuni DF52-176 | Double fuel pump Mikuni DF52-176 | 1 |
| **7** | AMS.00779 | Maglia congiunzione catena KZ | Link for KZ chain | 1 |
| **8** | AFS.03875 | Filtro aria nitro 30 KZ 8/SA/24 argento | Air filter nitro 30 KZ 8/SA/24 silver | 1 |
| **9** | AML.01933 | Supporto filtro aria | Air filter support | 1 |
| **10** | AFS.01935 | Spugna adesiva supporto filtro | Sticker sponge for filter | 1 |
| **11** | SC0.01934 | Piastrina supporto filtro KZ | KZ filter support plate | 1 |
| **12** | AFS.00797Z24 | Corona KZ Ø50 ergal Z24 | Sprocket KZ Ø50 ergal Z24 | 1 |
| **13** | PMV.FILTRO.KZ | Kit viti montaggio filtro aria | Screw mounting kit air filter | 1 |
| **14** | AFS.05987 | Pompa acqua R-HTD | Water pump R-HTD | 1 |
| **15** | AMS.00671 | Catena al metro KZ standard | Chain KZ std per meter | 1 |
| **16** | AFN.00248 | Cinghiolo pompa acqua 2000 | Water pump driving belt 2000 | 5 |
| **17** | AMS.00139 | Tubo benzina al metro | Fuel tube per meter | 3 |
| **18** | AFS.00514 | Morsetto filo | Cable clamp | 2 |
| **19** | AFS.00515 | Filo gas | Gas cable | 1 |
| **20** | AFS.01364 | Filo frizione | Clutch cable | 1 |
| **21** | AMS.00516 | Guaina filo Ø6 frizione | Outer cable Ø6 for clutch | 2 |
| **22** | AMS.01370 | Guaina filo Ø5 gas standard | Std outer cable Ø5 for gas | 1,5 |
| **23** | AFS.01981 | Raccordo Y festo 6mm | Y fitting festo 6mm | 1 |
| **24** | AFS.01982 | Raccordo T festo | T fitting festo | 1 |
| **25** | AFS.01016 | Filtro benzina | Fuel filter | 1 |
| **26** | AFN.00776 | Fascetta acciao 16-25 radiator | Radiator steel band 16-25 | 8 |
| **27** | AFS.00761 | Tubo acqua curvo | Curved water pipe | 3 |
| **28** | SC0.06052 | Supporto pompa benzina Y | Fuel pump support Y | 1 |
| **29** | FK0.06571 | Kit supporto pompa benzina | Fuel pump support kit | 1 |
| **30** | FKN.00259 | Kit bulloneria fissaggio sedile KZ | KZ seat mounting kit | 1 |
| **a** | AFS.04662 | Spessore sedile 10-27x14 in nylon | Seat lining 10-27x14 nylon | 8 |
| **b** | FAN.00260 | Rondella 8 sedile alluminio nera | Aluminum seat washer black 8 | 8 |
| **c** | AFN.04764 | Rondella 8,5-46x2 sedile CIK | Washer 8,5-46x2 CIK seat | 8 |

A

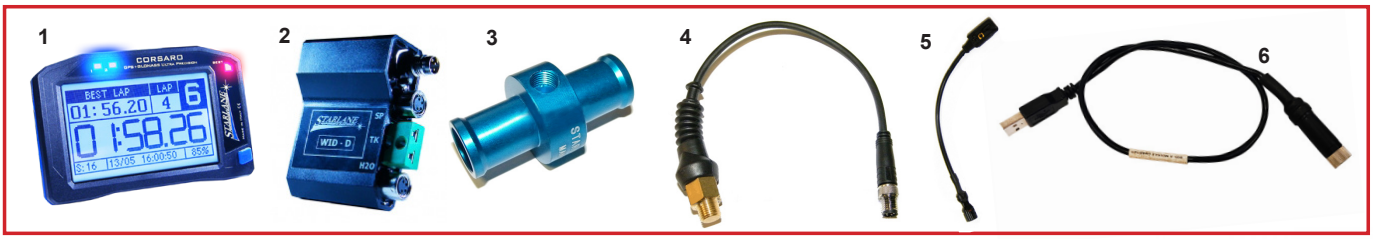
1
2
3
4
5
6
CORSARO
BEST LAP
LAP
01:56.20
4
6
01:58.26
STARLANE
WID - D

B

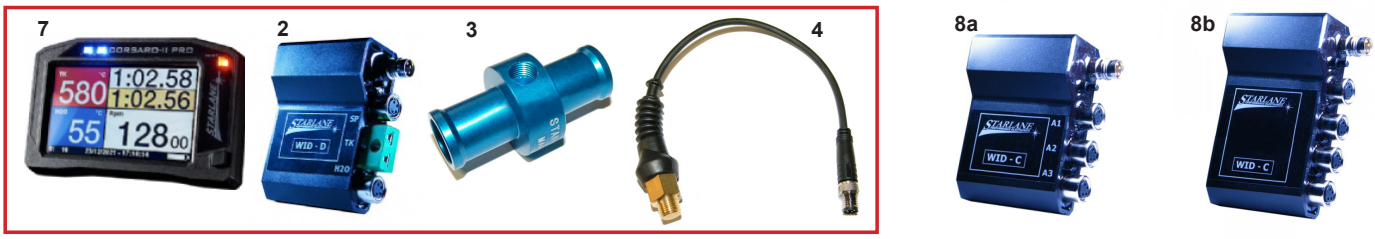
7
2
3
4
8a
8b
CORSARO-II PRO
580
1:02.58
1:02.56
55
128.00
STARLANE
WID - D
WID - C

9
10
11
12
13
14
15
16
5
17
6
STARLANE
UNIVERSAL SMART CHARGER

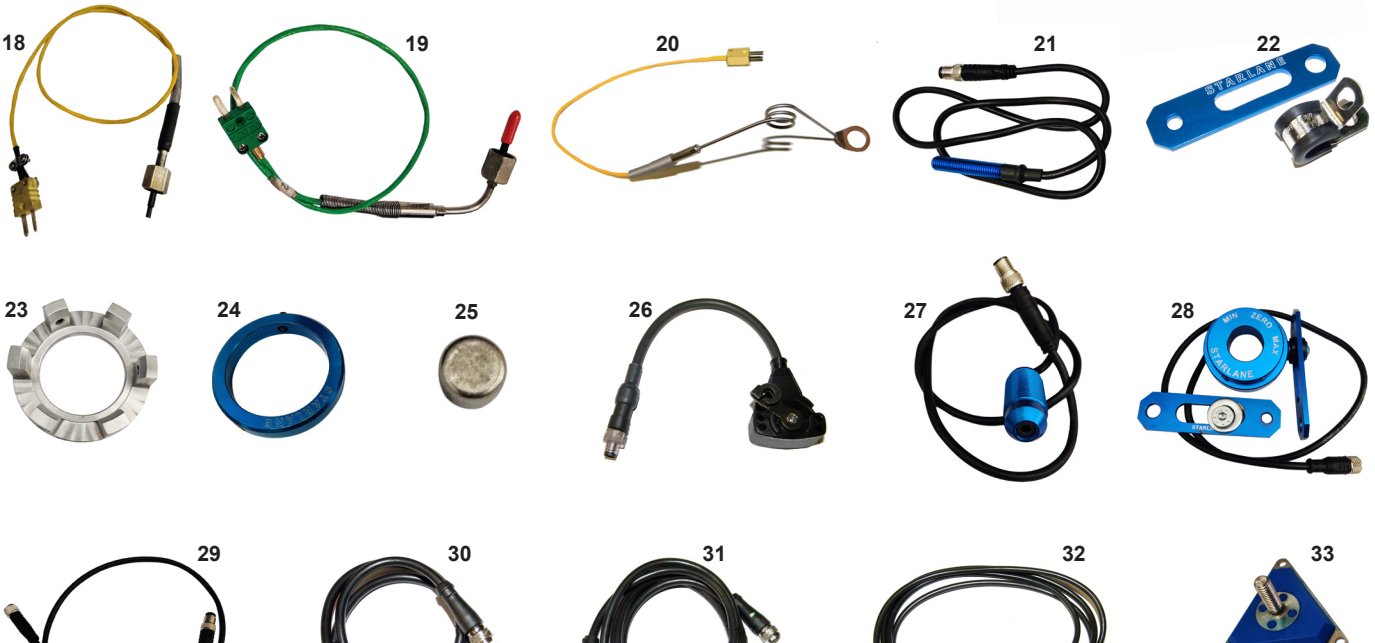
18
19
20
21
22
23
24
25
26
27
28
29
30
31
32
33
STARLANE

| ES | COD. | DESCRIZIONE | DESCRIPTION |
|---|---|---|---|
| **A** | AFS.06025 | Kit Corsaro II R schermo bianco nero | Corsaro II R kit black&white screen |
| **B** | AFS.06026 | Kit Corsaro II Pro schermo colori | Kit Corsaro II Pro color screen |
| **1** | AFS.06353 | Display Corsaro II R schermo bianco e nero | Corsaro II R black&white screen |
| **2** | AFS.04156 | WID-D pro EGT-H2o-speed-Int. battery-RPM | WID-D pro EGT-H2o-speed-Int. battery-RPM |
| **3** | AFS.03760 | Supp. per sensore acqua Ø19mm filetto M10X1 | Water sensor holder Ø19mm thread M10X1 |
| **4** | AFS.03761 | Sensore temperatura acqua filetto M10X1 | M10X1 thread water temperature sensor |
| **5** | AFS.06358 | Cavo display alimentazione per kit AFS.04304 | Power display cable for kit AFS.04304 |
| **6** | AFS.04569 | Cavo ricarica WID D | WID D charging cable |
| **7** | AFS.06354 | Display Corsaro II Pro schermo colori | Display Corsaro II Pro color screen |
| OPZ. **8a** | AFS.03751 | WID-C modulo per ingresso 3 canali analogici | WID-C module for 3-channel analog input |
| OPZ. **8b** | AFS.06355 | WID-C modulo per ingresso 4 canali analogici | WID-C module for 4-channel analog input |
| **9** | AML.04652 | Supp. sedile CRG mod. WID (Or non incluso) | CRG seat supp. for WID mod. (Or not included) |
| **10** | AFS.03765 | Batteria 7,4V | Battery 7,4V |
| **11** | AFS.03767 | Carica batteria multivoltage per batteria 7,4V | Multivoltage battery charger for battery 7,4V |
| **12** | AFS.04471 | Carica batteria per batteria 3,7V tipo 18650 | Battery charger for 3,7 type 18650 battery |
| **13** | AFS.04472 | Batteria esterna display 3,7V tipo 18650 | External display battery 3,7V type 18650 |
| **14** | AFS.04473 | Portabatteria est. display per batteria 18650 V2 | Display ext. battery holder for 18650 V2 battery |
| **15** | AFS.04304 | Kit batteria esterna display Corsaro serie 2 | Corsaro series 2 display external battery kit |
| **16** | AFS.06357 | Cavo display aliment. esterna per batt. 7,4V | External power display cable or battery 7,4V |
| **17** | AFS.06359 | Cavo alimentazione display per batteria motore | Display power cable for engine battery |
| **18** | AFS.05677 | Sonda scarico verticale termocoppia filetto M12 | M12 thread thermocouple vertical exhaust probe |
| **19** | AFS.06364 | Sonda scarico curvo termocoppia filetto M12 | Curved exhaust probe thermocouple thread M12 |
| **20** | AFS.03763 | Sensore sottocandela termocoppia | Thermocouple under spark plug sensor |
| **21** | AFS.03752 | Sensore magnetico velocità ruota | Magnetic wheel speed sensor |
| **22** | AFS.03755 | Staffa sensore velocià Starlane | Starlane speed sensor bracket |
| **23** | AFS.03754 | Ruota fonica ant. Starlane per mozzo anteriore | Starlane front phonic wheel for front hub |
| **24** | AFS.03753 | Ruota fonica post. Starlane per assale 50mm | Starlane rear phonic wheel for 50mm axle |
| **25** | AFS.03756 | Magnete 6x3mm per velocità | 6x3mm speed magnet |
| **26** | AFS.03764 | Sensore rotativo per acceleratore e freno | Rotary sensor for accelerator and brake |
| **27** | AFS.06361 | Sensore infrarosso temperature gomme | Tire temperature infrared sensor |
| **28** | AFS.06362 | Sensore sterzo | Steering sensor |
| **29** | AFS.06363 | Prolunga maschio-femmina conn. M8 25cm | Male-female connector extension M8 25cm |
| **30** | AFS.03757 | Prolunga maschio-femmina conn. M8 50cm | Male-female connector extension M8 50cm |
| **31** | AFS.03758 | Prolunga maschio-femmina conn. M8 100cm | Male-female connector extension M8 100cm |
| **32** | AFS.03759 | Prolunga maschio-femmina conn. M8 150cm | Male-female connector extension M8 150cm |
| **33** | AFS.04073 | Ricambio kit supporto elastico display | Replacement display elastic support kit |

| ES | COD. | DESCRIZIONE | DESCRIPTION |
|---|---|---|---|
| 1 | FM0.01860 | Porta pneumatici CRG L74 x H95cm | CRG tire racks L74 x H95cm |
| 2 | AFS.01094 | Carrello verticale espositore | Vertical stand with wheels |
| 3 | AFS.06021 | Carrello CRG con ruote post. piene | CRG trolley with rear solid tires |
| 4 | AFS.06924 | Carrello CRG con ruote alte | CRG trolley with high wheels |
| 5 | EX1191 | Attrezzo spurgo | Brake bleeding tool |
| 6 | AFS.01126 | Smontagomme | Tyre bead breaker |
| 7 | AM5.01133 | Piombo al kg | Lead to balance wheels |
| 7 | AFS.01720 | Piombo bilanciatura (60gr.) | Plomb balancing (60gr.) |
| 8 | AFS.00969 | Rotolo nastro adesivo CRG H.50 | CRG adhesive tape H.50 |
| 9 | AFS.03992 | Copri cilindro protezione invernale | Winter cylinder cover |

| ES | COD. | DESCRIZIONE | DESCRIPTION |
|---|---|---|---|
| **1** | AFS.01386 | Misurino olio | Oil measure |
| **2** | EX0194 | Olio freni idrofren DOT4 lt.1 | Idrofren brake fluid lt.1 |
| **3** | AFS.01977 | Xeramic olio evolution Castor | Xeramic evolution Castor oil |
| **4** | AFS.02221 | Xeramic olio synmax full synthetic | Xeramic synmax full synthetic oil |
| **5** | AFS.01009 | Xeramic pulitore freni | Xeramic brake cleaner |
| **6** | AFS.01855 | Xeramic istant gasket | Xeramic istant gasket |
| **7** | AFS.05044 | Pompa benzina doppia Mikuni DF52-176 | Double fuel pump Mikuni DF52-176 |
| **8** | SC0.06052 | Supporto pompa benzina Y | Fuel pump support Y |
| **9** | AFS.01843 | Sniper V2 | Sniper V2 |
| **10** | AFS.03496 | Sniper KPI 4L | Sniper KPI 4L |
| **11** | AFS.06411 | Interruttore a pulsante Ø22,5 (2pz.) | Push button switch Ø22,5 (2pcs.) |
| **12** | FM0.06429 | Cablaggio accensione motore mini | Ignition harness for Mini engine |
| **13** | FK0.06429 | Cablaggio accensione motore mini+pulsanti | Ignition harness kit for Mini engine+push-buttons |
| **14** | AFS.06747 | Acceleratore manuale per OK/OKJ | Accelerator helper for OK/OKJ |

1
2
3
4
5
6
7
8
9
10
11
12
13
14
15
16
17
18
19
20
21
22
23
24
25
26
27
28
29
30
31
32
33
34
35
36
37
38
39
40
41
42
43
44
45
46
47
48
49
50
51
52
53
54
55
56
57
58
59
60
61
62
63
64
Lomar
C 50
HONDA
GX
HONDA

| ES | COD. | DESCRIZIONE | DESCRIPTION |
|---|---|---|---|
| 1 | AFS.05266 | Carena laterale mini KG MK20 dx/sx nero | Mini KG side fairing MK 20 lh-rh black |
| 2 | AFS.05294 | Carena posteriore MINI KG | Rear bumper MINI KG |
| 3 | AFS.01176Centr | Carena posteriore MINI KG Tris centrale | Central rear bumper mini KG Tris |
| 4 | AFS.01176Est | Carena posteriore MINI KG Tris esterno | External rear bumper mini KG Tris |
| 5 | AFS.00436 | Paracapelli Puffo plastica | Plastic carter Puffo |
| 6 | AFS.05287 | Spoiler mini KG MK20 nero | Mini front spoiler KG MK20 black |
| 7 | AFS.05288 | Frontalino mini KG MK 20 nero | Mini front fairing KG MK 20 black |
| 8 | AFS.06373 | Placca fix spoiler NA | Plastic plate NA spoiler |
| 9 | AFS.05856PUFFO | Sedile resina Puffo CRG 23 | Resin seat CRG 23 Puffo |
| 10 | AFS.00537 | Volante Puffo | Steering wheel Puffo |
| 11 | SC0.5269D.PUFFO | Paraurti laterale Puffo KG MK20 dx | Side fender Puffo KG MK20 right |
| 12 | SC0.5269S.PUFFO | Paraurti laterale Puffo KG MK20 sx | Side fender Puffo KG MK20 left |
| 13 | SL1.03278 | Flangia assale 45 3Fori Puffo | Axle flange 45 3Holes Puffo |
| 14 | FC0.01315 | Assale 45 Puffo | Axle 45 Puffo |
| 15 | FK0.00839 | Disco posteriore 45 Puffo montato | Rear disc mounted 45 Puffo |
| 16 | FM0.03871 | Mozzo posteriore 45x55 Puffo | Rear hub 45x55 Puffo |
| 17 | FM0.00839 | Mozzo corona 45 | Sprocket carrier 45 |
| 18 | AFS.00261 | Vite testa tonda larga M6x16 pianale | Floor tray screw large round head M 6x16 |
| 19 | SAN.00054 | Pianale Puffo nero | Floor Tray Puffo black |
| 20 | SC0.00282 | Paraurti anteriore Puffo | Front bumper Puffo |
| 21 | AMS.02651 | Catena 100-Puffo 219 (al mt) | Chain 100-Puffo 219 (per meter) |
| 22 | AFS.00506 | Corona Puffo | Sprocket Puffo |
| 23 | FVO.01783 | Pedaliera Puffo nero | Foot pedal Puffo black |
| 24 | FK0.00270 | Pedale completo Puffo freno | Puffo brake pedal complete |
| 25 | FK0.00268 | Pedale completo Puffo gas | Foot gas pedal Puffo complete |
| 26 | SC0.04396.PUFFO | Supporto frontalino inf. reg. asola Puffo | Front fairing supp. below adj buttonhole Puffo |
| 27 | SC0.5341S | Supporto frontalino superiore mini MK 20 sx | Front fairing support upper mini MK 20 left |
| 27 | SC0.5341D | Supporto frontalino superiore mini MK 20 dx | Front fairing support upper mini MK 20 right |
| 28 | AFS.00241 | Paracatena riparo 100cc | Guard chain guard 100cc |
| 29 | FK0.02191 | Tendicatena Puffo completo | Chain tightener Puffo complete |
| 30 | FVO.00411 | Carter paracatena Puffo Honda 35 nero | Chain guard Puffo Honda 35 black |
| 31 | FM0.0710D | Fusello CRG mini perno NA3 3F DX compl. | CRG mini stub axle NA 3 3H Right complete |
| 32 | FM0.0710S | Fusello CRG Mini perno NA3 3F SX compl. | CRG mini stub axle NA 3 3H Left complete |
| 33 | FC0.00060 | Piantone sterzo Puffo | Steering column Puffo |
| 34 | AFS.01295 | Motore Comer 50cc | Comer 50cc engine |
| 35 | FM0.02136 | Motore Honda GX35 montato x Puffo | Honda engine GX35 for Puffo |
| 36 | FL1.01471 | Piastra motore alluminio Puffo Comer | Comer engine mount Puffo aluminum |
| 37 | FL1.01437 | Cavallotto motore Comer alluminio | Engine mount aluminum Comer |
| 38 | AFS.01364 | Filo frizione | Clutch cable |
| 39 | AMS.00516 | Guaina filo Ø6 frizione | Sheater Ø6 for clutch |
| 40 | AFS.00514 | Morsetto filo RR | Cable clamp RR |
| 41 | FM0.00293NEUT | Cerchio MG H180 posteriore no viti | Aluminum rear rim H180 no screws |
| 42 | FM0.00455NERI | Cerchio all. H110 anteriore mini completo | MG front rim H110 mini complete |
| 43 | FBN.01197 | Vite fusello Puffo 75mm | Puffo stub screw 75mm |
| 44 | FAN.00066 | Distanziale perno fusello 17 nero 8mm | Stub axle spacer 17 black 8mm |
| 45 | FAN.00068 | Distanziale perno fusello 17 nero 4mm | Stub axle spacer 17 black 4mm |
| 46 | FM0.00458 | Pinza freno Puffo completo | Rear brake caliper Puffo complete |
| 47 | FBN.01086 | Perno pinza Puffo | Caliper pivot Puffo |
| 48 | FZ0.00517 | Molla pinza freno Puffo | Puffo brake spring |
| 49 | AFN.00350 | Rondella 8,5-16x1,5 | Washer 8,5-16x1,5 |
| 50 | AFS.0047D | Uniball sterzo dx c/dado | Ball joint rh with nut |
| 51 | AFS.0047S | Uniball sterzo sx c/dado | Ball joint sx with nut |
| 52 | AFS.00257 | Registro filo M6 | Cable adjuster M6 |
| 53 | FK0.02177 | Kit supporti carena mini KG no viti | Rear fender clamps kit KG no screws |
| 54 | FKN.00053 | Kit completamento telaio Puffo | Frame completion kit Puffo |

| ES | COD. | DESCRIZIONE | DESCRIPTION |
|---|---|---|---|
| **55** | FK0.05447 | Kit fiss. spoiler Puffo KG - MK14/20 chiuso | Puffo spoiler fixing kit KG - MK14/20 closed |
| **56** | PMV.C.PUFFO | Kit viti montaggio carena mini | Mini fairing mounting screws kit |
| **57** | FKN.02469 | Kit vite carena post plastica Ø21<25 Puffo | Rear fairing plastic kit screws Ø21<25 Puffo |
| **58** | FAN.01626 | Mozzo volante inclinato nero | Steering wheel hub incline |
| **59** | AFN.03912 | Fascetta ferma tubo freno Ø6 | Brake tube band Ø6 |
| **60** | AFN.00441 | Cuscinetto assale 45 | Axle bearing 45 |
| **61** | FAN.01808 | Barretta esagonale CRG cm.16,5 nera | Hexagonal track rod CRG cm.16,5 black |
| **62** | AFS.00246 | Chiavetta assale 2 pioli brunita | Rear axle keyway 2 pins |
| **63** | AMS.02652 | Maglia congiunzione catena Puffo | Joining link chain Puffo |
| | AFS.04134 | Pneumatico CS Raptor 10x4,50-5 | Tire CS Raptor 10x4,50-5 |
| | AFS.04135 | Pneumatico CS Raptor 11x6,00-5 | Tire CS Raptor 11x6,00-5 |
| | FVO.00084 | Scocca Puffo Comer nero | Puffo frame Comer black |
| **64** | FM0.05180 | Coperchio campana frizione Puffo compl. | Clutch drum cover Puffo complete |

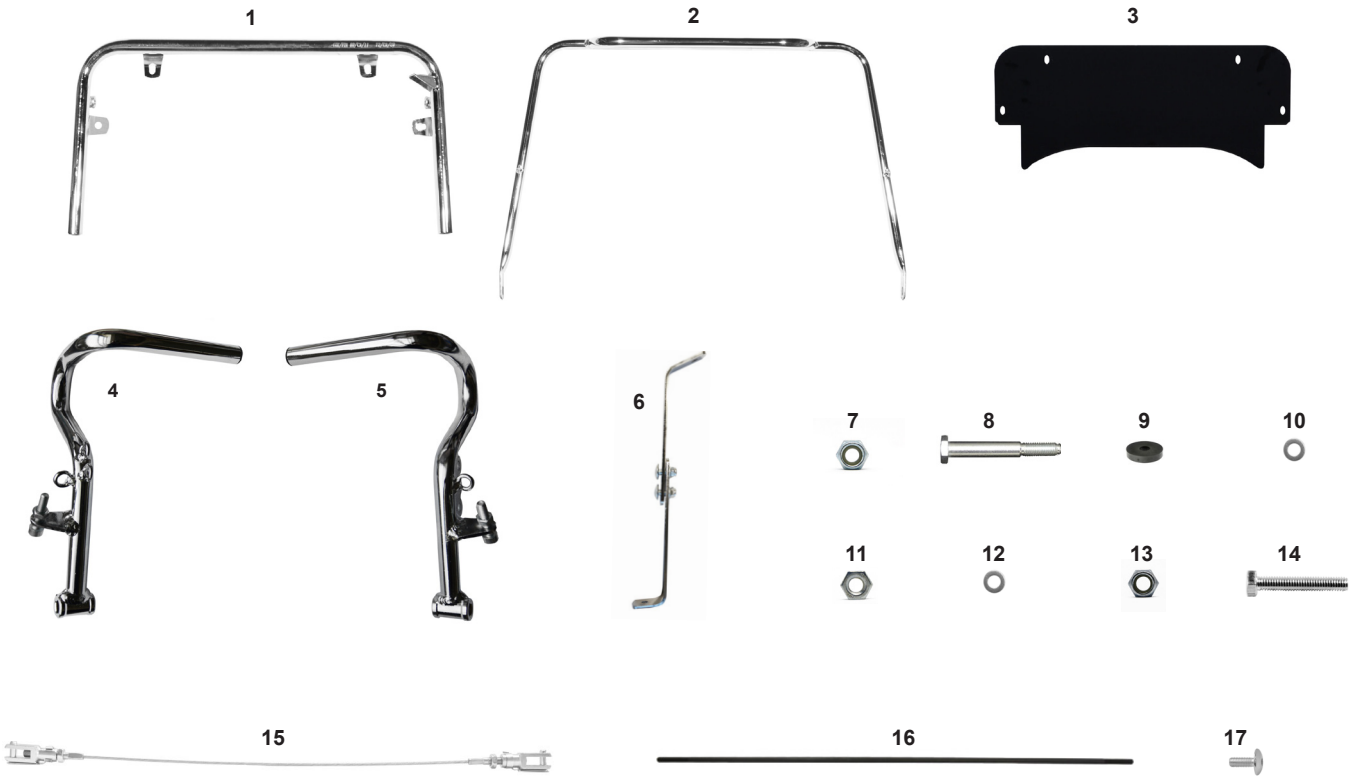


A

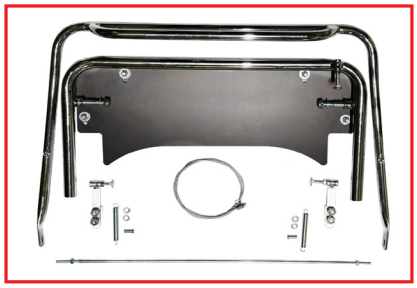

B

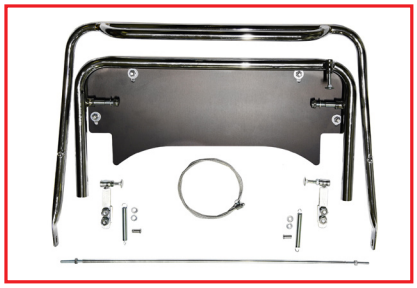

C

| ES | COD. | DESCRIZIONE | DESCRIPTION |
|---|---|---|---|
| **A** | FK0.06272.KZ | Kit estensione telaio 507/508 KZ | Extension kit chassis 507/508 KZ |
| **B** | FK0.06272.OK | Kit estensione telaio 507/508 OK | Extension kit chassis 507/508 OK |
| **C** | FK0.01652* | Kit estensione telaio NA2/NA3 | Extension kit chassis NA2/NA3 |
| **1** | SC0.01134 | Paraurti anteriore inferiore XL | Front bumper bar below XL |
| **2** | SC0.01652 | Paraurti anteriore superiore XL | Front bumper bar top XL |
| **3** | FAN.02256 | Pianale estensione | Extension floor tray |
| **4** | SC0.00869 | Pedale freno arretrato con tappo | Foot brake pedal back position with cap |
| **5** | SC0.00868 | Pedale gas arretrato con tappo | Gas pedal back position with cap |
| **6** | FK0.04457 | Supporto frontalino inferiore XL | Front fairing support below XL |
| **7** | AFN.00264 | Dado M 6 autobloccante alto | Nut M 6 high autoblock |
| **8** | SBN.00271 | Perno pedale lungo | Pedal pivot long |
| **9** | AFS.00258 | Gommino pianale | Floor tray rubber |
| **10** | AFN.00263 | Rondella 6,5-18x1,6 | Washer 6,5-18x1,6 |
| **11** | AFN.00106 | Dado M 6 autoblock basso | Nut M 6 low self-locking |
| **12** | AFN.00129 | Rondella 8,5-17x1,5 | Washer 8,5-17x1,5 |
| **13** | AFN.00160 | Dado M 8 autoblock basso | Nut M 8 low self-locking |
| **14** | AFN.00283 | Vite M 6x35 esagonale | M 6x35 hexagonal head screw |
| **15** | AFS.00811 | Cavo sicurezza cm.52 | Safety cable cm.52 |
| **16** | SBN.01358 | Asta freno zincata cm.52 | Brake rod cm.52 |
| **17** | AFS.00261 | Vite testa tonda pianale M 6x16 | Floor tray screw large round head M 6x16 |

* Include i pedali cod. SC0.00868 e SC0.00869 / Pedals cod.SC0.00868 and SC0.00869 are included.

A

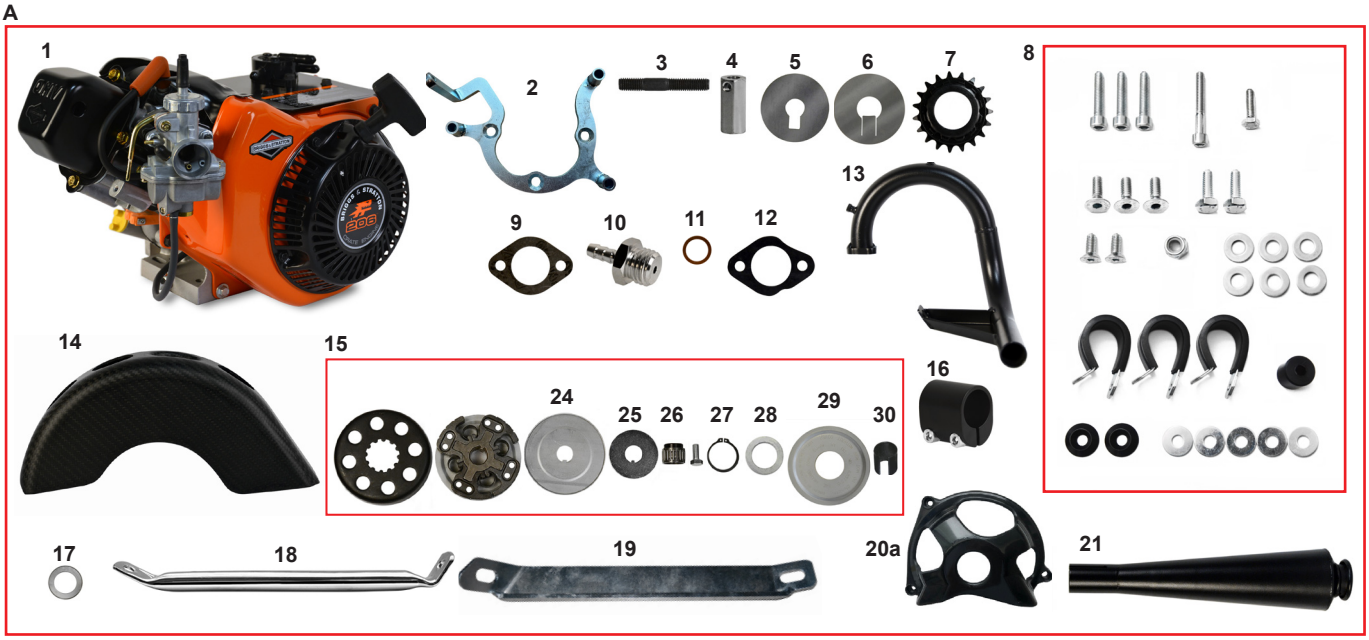
1
2
3
4
5
6
7
8
9
10
11
12
13
14
15
16
17
18
19
20a
21
24
25
26
27
28
29
30

22

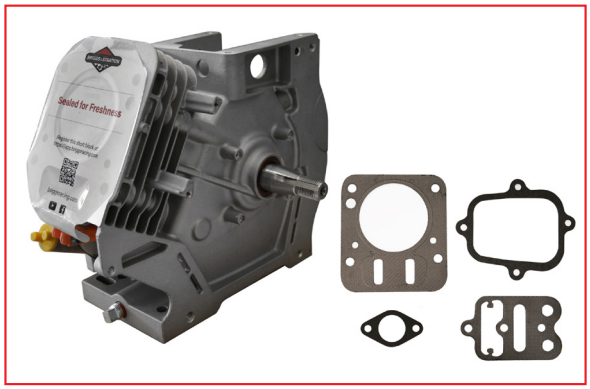

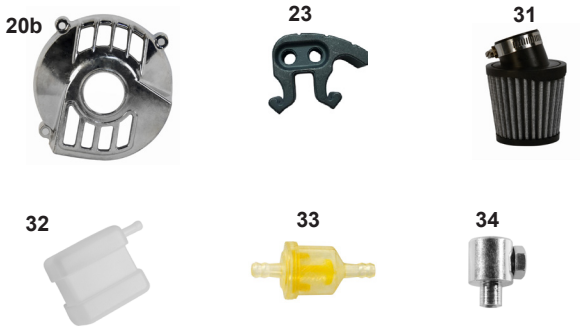
20b
23
31
32
33
34

35
36
37
38

39
40

41

42

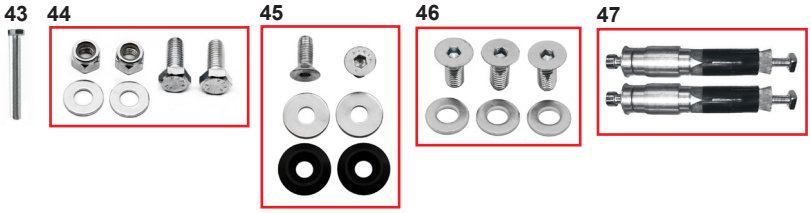
43
44
45
46
47

48

| ES | | COD. | DESCRIZIONE | DESCRIPTION |
|---|---|---|---|---|
| S-M | A | FM0.05571 | Motore B&S (no piastra motore) | B&S engine (without eng. mount) |
| S-M | 1 | 124332820101BC1001 | Motore B&S | B&S engine |
| S-M | 2 | SZ0.03931 | Adattatore B&S protezione frizione | B&S gasket clutch protection adapter |
| S | 3 | AFN.04754 | Prigioniero M6x42 radice lunga | Prisoner M6x42 long root |
| S | 4 | SZ0.04536 | Dado scarico B&S M6x22 | Exhaust nut B&S M6x22 |
| S-M | 5 | SZ0.04322 | Rondella sicurezza pignone B&S | B&S pinion safety washer |
| S-M | 6 | SZ0.04323 | Sottorondella sicurezza pignone B&S | B&S pinion safety under washer |
| S-M | 7 | AFS.04333 | Pignone motore frizione Hilliard Z19 | 19 tooth chain sprocket Hilliard Inferno |
| S-M | 8 | PMV.MOTORE.BRIGGS | Kit viti montaggio motore B&S | B&S engine mounting screw kit |
| S-M | 9 | AFS.04267 | Guarnizione collettore scarico B&S | B&S exhaust manifold gasket |
| S-M | 10 | SL1.03928 | Tappo presa impulso B&S | Fuel pump connettor B&S |
| S | 11 | AFN.04502 | Rondella 20-26x1,5 rame | Washer 20-26x1,5 |
| S-M | 12 | SBN.04749 | Spessore collettore scarico B&S | B&S exhaust manifold thickness |
| S-M | 13 | FVN.04185 | Collettore scarico B&S nero | B&S black exhaust manifold |
| S-M | 14 | AFS.04187 | Protezione scarico B&S | B&S exhaust protection |
| S-M | 15 | AFS.04335 | Frizione Hilliard inferno flame | Hilliard inferno flame clutch |
| S-M | 16 | FMN.00773 | Fascia 32 stabilizzatore nera | Stabilisator clamp 32 black |
| S-M | 17 | SZ0.04266 | Rondella bloccaggio frizione B&S | Clutch fixing washer for B&S |
| S-M | 18 | SC0.05032 | Rinforzo marmitta B&S cm. 26 | Muffler reinforcement B&S 26 cm. |
| S-M | 19 | SZ0.06537 | Rinforzo marmitta B&S cm. 25 | Muffler reinforcement B&S 25 cm. |
| S-M | 20a | A10.1061600 | Carter frizione B&S | Clutch carter B&S |
| S-M | 20b | MXT.10030 | Carter frizione (mod. precedente) | Clutch carter (previous mod.) |
| S-M | 21 | FVN.04186 | Terminale scarico B&S nero | B&S black exhaust terminal |
| S-M | 22 | 555715A | Mono blocco motore B&S | B&S engine monoblock |
| S-M | 23 | AFS.05422 | Ganascia attrito frizione Hilliard Inferno | Hilliard Inferno clutch friction clamp |
| S-M | 24 | AFS.06299 | Cover paragrasso frizione Hilliard Inferno | Cover for fat clutch Hilliard Inferno |
| S-M | 25 | AFS.05421 | Rondella frizione Ø56 Hilliard Inferno | Hilliard Inferno clutch washer Ø56 |
| S-M | 26 | AFS.06297 | Gabbia rulli frizione Hilliard Inferno | Roller cage clutch Hilliard Inferno |
| S-M | 27 | AFS.05420 | Seeger bloccaggio pignone Hilliard Inf. | Hilliard Inferno pinion locking circlip |
| S-M | 28 | AFS.06296 | Distanziale frizione Hilliard Inferno | Brake pad spacer clutch Hilliard Inferno |
| S-M | 29 | AFS.06298 | Cover interna frizione Hilliard Inferno | Inner cover clutch Hilliard Inferno |
| S-M | 30 | AFS.04332 | Molla per frizione Hilliard Inferno nera | Hilliard Inferno black spring for clutch |
| S-M | 31 | AFS.03903 | Filtro aria baby B&S | Air filter baby B&S |
| S-M | 32 | AFS.00753 | Tanica recupero | Recovery tank |
| S-M | 33 | AFS.03868 | Filtro benzina piccolo | Small fuel filter |
| S-M | 34 | AFS.00514 | Morsetto filo | Cable clamp |
| S-M | 35 | AFS.00515 | Filo gas | Gas cable |
| S-M | 36 | AMS.01370 | Guaina Ø5 filo gas | Outer cable Ø5 for gas |
| S-M | 37 | AMS.00139 | Tubo benzina al metro | Fuel pipe per meter |
| S-M | 38 | FMN.06161 | Piastra motore CRG 30 AL B&S + prig. | Engine mount CRG 30 AL B&S + stud |
| S-M | 39 | AFS.00171 | Corona KF **misure da Z64 a Z74 | Ring gear KF Z66 **sizes from Z64 to Z74 |
| M | 40 | AFS.00614110 | Catena 110M KF | Chain 110M KF |
| S | 40 | AFS.00614112 | Catena 112M KF | Chain 112M KF |
| S | 41 | FC0.01390 | Rinforzo sedile 26 dritto | Straight seat support 26 |
| S | 42 | FK0.03936 | Asta freno montata cm.39 FS4 | Brake rod complete cm.39 FS4 |
| M | 42 | FK0.00704 | Asta freno montata cm.33 Mini | Brake rod complete cm.33 Mini |
| S | 43 | AFN.02941 | Vite M10x100 esagonale | M10x100 hexagonal head screw |
| S-M | 44 | FK0.05747 | Kit viti montaggio rinforzo marmitta | Muffler reinforcement mounting screw kit |
| S-M | 45 | FK0.05748 | Kit viti montaggio protezione scarico | Exhaust protection mounting screw kit |
| S-M | 46 | FK0.05749 | Kit viti montaggio adattatore frizione | Clutch adapter mounting screw kit |
| S | 47 | FK0.05519 | Kit vite + esp. carena post. plast. Ø28 | Expander rear screw kit Ø28 plastic |
| S | 48 | FK0.05229.28FS4 | Kit att. car. post. CIK/14 Ø28 KG esp. | Rear fairing conn. kit CIK/14 D28 KG exp. |

**S** = FS4 SENIOR
**M** = MINI

1
2
3
4
5
6
7
8
9
10
11
12
13
14
15
16
17
18
19
20
21
22
23
24
25
26
27
28
29
30
31
32
33
34
35
36
37
38
39
41
42
43
40
44
45
46
47
48
49

| ES | COD. | DESCRIZIONE | DESCRIPTION |
|---|---|---|---|
| 1 | 555737 | Candela Champion RC12YC B&S | Spark plug Champion B&S RC12YC |
| 2 | A10.1061600 | Carter frizione B&S | B&S clutch carter |
| 3 | 691885 | Guarnizione aspirazione B&S | B&S gasket aspiration |
| 4 | 555601 | Guarnizione OR B&S | B&S OR gasket |
| 5 | 555545 | Kit collettore d'aspirazione B&S | B&S intake manifold kit |
| 6 | AFS.04456 | Pignone motore frizione Hilliard Inferno Z17 | 17 tooth chain sprocket Hilliard Inferno |
| 7 | AFS.04334 | Pignone motore frizione Hilliard Inferno Z18 | 18 tooth chain sprocket Hilliard Inferno |
| 8 | AFN.04753 | Prigioniero M6x37 radice lunga | Long root M6x37 prisoner |
| 9 | A90.0500000 | Silent block piccolo B&S | B&S Small silent block |
| 10 | FVN.04779 | Supporto paracatena B&S mini nero | Black mini chain guard support B&S |
| 11 | FKN.04779 | Supporto paracatena mini nero completo | Black mini chain guard support complete |
| 12 | 692600 | Tubo sfiato olio B&S | Air releasing pipe B&S oil |
| 13 | 695287 | Avviamento manuale B&S | B&S manual starting |
| 14 | 555718 | Bobina B&S | B&S coil |
| 15 | 555658 | Carburatore B&S | B&S carburetor |
| 16 | 555679 | Copertura bilancere B&S | B&S rocker cover |
| 17 | 555593 | Diffusore carburatore B&S | B&S carburetor diffuser |
| 18 | 555778 | Ventola-volano | Fan-Flywheel |
| 19 | 555550 | Fermo valvola B&S | B&S retainer valve |
| 20 | 555591 | Galleggiante del carburatore B&S | B&S carburetor float |
| 21 | 555536 | Getto massimo carburatore B&S | B&S maximum carburetor jet |
| 22 | 555594 | Getto minimo carburatore B&S | B&S idle carburetor jet |
| 23 | 798462 | Guarnizione carter B&S | B&S crankcase gasket |
| 24 | 691890 | Guarnizione copertura bilancere B&S | B&S rocker arm cover gasket |
| 25 | 555595 | Guarnizione tappo superiore carburatore B&S | B&S carburetor top cap gasket |
| 26 | 555698 | Guarnizione testa cilindro B&S | B&S cylinder head gasket |
| 27 | 694088 | Guarnizione testa cilindro piatto punterie B&S | B&S flat cylinder head gasket tappets |
| 28 | 691343 | Guida valvola B&S | B&S guide push rod |
| 29 | 555605 | Kit revisione carburatore B&S | B&S carburetor overhaul kit |
| 30 | 26826 | Molla per valvola motore B&S | B&S spring for engine valve |
| 31 | 299819S | Paraolio lato accensione B&S | B&S engine side oil seal |
| 32 | 692550 | Paraolio lato frizione B&S | B&S clutch side oil seal |
| 33 | 597338 | Pompa benzina B&S | B&S fuel pump |
| 34 | 555775 | Raccordo tubo pressione B&S | B&S pressure tube connection |
| 35 | 555650 | Seeger+clips per spillo carburatore B&S | Circlip+clips for B&S carburetor needle |
| 36 | 555602 | Spillo carburatore completo di seeger+clips | Carburetor needle complete with circlip+clips |
| 37 | 691663 | Tappo drenaggio olio B&S | B&S oil drain plug |
| 38 | 281658S | Tappo olio B&S | B&S oil cap |
| 39 | 555659 | Tappo vaschetta carburatore B&S | B&S carburetor bowl drain cap |
| 40 | 555635 | Testa cilindro B&S | B&S cylinder head |
| 41 | 555590 | Valvola a farfalla B&S | B&S throttle valve |
| 42 | 555648 | Valvola per galleggiante B&S | B&S valve for float needle |
| 43 | 555592 | Vaschetta carburatore guarnizione B&S | B&S bowl carburetor gasket |
| 44 | FBN.00155 | Assale 50 M20 std nero 1020 | Axle 50 M20 std black 1020 |
| 45 | FBN.05217 | Assale 30 950 M T4 nero x Mini Briggs | Axle 30 950 M T4 black x Mini Briggs |
| 46 | AFS.05652 | Pneumatico ant. VG Mini 10x4,00-5 | Front tyre VG Mini 10x4,00-5 |
| 47 | AFS.05653 | Pneumatico post. VG Mini 11x5,00-5 | Rear tyre VG Mini 11x5,00-5 |
| 48 | AFS.04309 | Pneumatici anteriore VG FX 10x4,60-5 | Front tyre VG FX 10x4,60-5 |
| 49 | AFS.04310 | Pneumatici posteriore VG FX 11x7,10-5 | Rear tyre VG FX 11x7,10-5 |
| | AFS.05636 | Pneum. pioggia ant.VG W6 10x4,20-5 | Front tyre for rain VG W6 10x4,20-5 |
| | AFS.05637 | Pneum. pioggia post.VG W6 11x6,00-5 | Rear tyre for rain VG W6 11x6,00-5 |

# ABBIGLIAMENTO - ACCESSORI
# CLOTHING LINE - ACCESSORIES

1

2

3

4

| ES | COD. | DESCRIZIONE | DESCRIPTION |
|---|---|---|---|
| 1 | AAC.30422 | Felpa CRG Sparco | Sweat shirt CRG Sparco |
| 2 | AAC.30423 | Piumino CRG Sparco | Jacket CRG Sparco |
| 3 | AAC.30425 | T-shirt CRG Sparco | T-shirt CRG Sparco |
| 4 | AAC.30424 | Polo CRG Sparco | Polo shirt CRG Sparco |

**Taglie/Size XS-S-M-L-XL-XXL-XXXL**

1

2

3

4

| ES | COD. | DESCRIZIONE | DESCRIPTION |
|---|---|---|---|
| 1 | AAC.30426 | Pantalone CRG Sparco | Trousers CRG Sparco |
| 2 | AAC.30428 | Gilet CRG Sparco | Gilet CRG Sparco |
| 3 | AAC.30429 | Soft Shell CRG Sparco | Soft Shell CRG Sparco |
| 4 | AAC.30427 | Bermuda CRG Sparco | Bermuda CRG Sparco |

**Taglie/Size XS-S-M-L-XL-XXL-XXXL**

1

2

| ES | COD. | DESCRIZIONE | DESCRIPTION |
|---|---|---|---|
| 1 | AAC.30172* | T-Shirt nera&arancio CRG | T-Shirt black&orange CRG |
| 2 | AAC.30030** | K-Way nero | K-Way black |

*** Taglie/Size da/from XS a/to XXXL **S-M-L-XL-XXL-XXXL**

1

2

3

4

5

6

7

8

9

| ES | COD. | DESCRIZIONE | DESCRIPTION |
|---|---|---|---|
| 1 | AAC.30105 | Fascia CRG pile coulisse | Headband cap pile coulisse |
| 2 | AAC.30053 | Sciarpa | Scarf |
| 3 | AAC.30038 | Paraorecchie | Head warmer |
| 4 | AAC.30409 | Cappellino baseball CRG personalizzato 3D | 3D baseball cap CRG |
| 5 | AAC.30420 | Berretta lana CRG jacquard | Wool hat CRG jacquard |
| 6 | AAP.30099 | Sottocasco nero | Balaclava |
| 7 | AAP.30110 | Protezione torace Bengio AB7 | Bengio thorax protection AB7 |
| 8 | AAP.30103 | Protezione torace Bengio | Bengio thorax protection |
| 9 | AAP.30036 | Paracollo | Neck protection |

1

2

3

| ES | COD. | DESCRIZIONE | DESCRIPTION |
|---|---|---|---|
| 1 | AAC.30185* | T-shirt CRG 40° anniversario oversized | T-shirt CRG 40° anniversary oversized |
| 2 | AAC.30184** | T-shirt CRG 40° anniversario | T-shirt CRG 40° anniversary |
| 3 | AAC.30186*** | Felpa CRG 40° anniversario | Sweatshirt CRG 40° anniversario |

*** Taglie/Size S/M/L, **XXS da/to 3XL, ***XS da/to 4XL**

1

TABELLA MISURE / SIZE TABLE PAG. 118-119

2

3

| ES | COD. | DESCRIZIONE | DESCRIPTION |
|---|---|---|---|
| 1 | AAP.30183 | Tuta CRG nero arancio light personalizzata | CRG racing suit light black orange customized |
| 2 | AAP.30183* | Tuta CRG standard nero arancio light | CRG racing suit light black orange standard |
| 3 | AAP.30086** | Tuta pioggia | Racing suit for rain |

*** Taglie/Size da/from 36 a/to 62** **** Taglie/Size da/from XS a/to XL**

1

2

3

4

5

6

| ES | COD. | DESCRIZIONE | DESCRIPTION |
|---|---|---|---|
| 1 | AAP.30157* | Scarpe kart CRG/Sparco new | CRG/Sparco kart shoes new |
| 2 | AAP.30150** | Guanti pioggia | Rain gloves |
| 3 | AAP.30175* | Stivaletti impermeabili Sparco | Waterproof boots Sparco |
| 4 | AAP.30163*** | Guanti neri lunghi | Kart gloves black long |
| 5 | AFS.06366 | Asciuga casco MKM | Racing helmet dryers MKM |
| 6 | AFS.06367 | Asciuga tuta MKM | Racing suit dryer MKM |

***Taglie/Size 36-37-38-39-40-41-42-43-44-45-46**
****Taglie/Size XS-S-M-L-XL ***Taglie/Size 07-08-09-10-11-12**

1

2

3

4

5

6

7

| ES | COD. | DESCRIZIONE | DESCRIPTION |
|---|---|---|---|
| 1 | AEC.30009 | Borsa trolley | Trolley bag |
| 2 | AAP.30026 | Grembiule lavoro | Mechanic apron |
| 3 | AEC.30067 | Zaino | Backpack |
| 4 | AEP.30032 | Ombrello | Umbrella |
| 5 | AEP.30014 | Coprikart nero | Black kart cover |
| 6 | AFS.06849 | Banner CRG orizzontale | Horizzontal CRG banner |
| 7 | AFS.06376 | Tappeto Flat Out CRG 205x115 | Flat out CRG carpet 205x115 |

1

2

3

4

| ES | COD. | DESCRIZIONE | DESCRIPTION |
|---|---|---|---|
| 1 | AAC.30095 S | T-Shirt CRG 5/6 anni | T-Shirt CRG 5/6 age |
| 1 | AAC.30095 M | T-Shirt CRG 7/8 anni | T-Shirt CRG 7/8 age |
| 1 | AAC.30095 L | T-Shirt CRG 9/10 anni | T-Shirt CRG 9/10 age |
| 1 | AAC.30095 XL | T-Shirt CRG 11/12 anni | T-Shirt CRG 11/12 age |
| 2 | AAC.30099XXXXXS EST | Felpa sport estiva 5/6 anni | Sweatshirt sport summer 5/6 age |
| 2 | AAC.30099XXXXS EST | Felpa sport estiva 7/8 anni | Sweatshirt sport summer 7/8 age |
| 2 | AAC.30099XXXS EST | Felpa sport estiva 9/11 anni | Sweatshirt sport summer 9/11 age |
| 2 | AAC.30099XXXS | Felpa sport 9/10 anni | Sweatshirt sport 9/10 age |
| 3 | AAC.30430.TG06.12 | Body baby bianco CRG 06/12 | Body baby white CRG 06/12 |
| 3 | AAC.30430.TG12.18 | Body baby bianco CRG 12/18 | Body baby white CRG 12/18 |
| 3 | AAC.30430.TG18.24 | Body baby bianco CRG 18/24 | Body baby white CRG 18/24 |
| 4 | AAP.30184* | Guanti neri lunghi bimbo | Kart gloves black long child |

*** Taglie/Size 04-05-06**

1

2

3

4

| ES | COD. | DESCRIZIONE | DESCRIPTION |
|---|---|---|---|
| 1 | AAP.3065 S/M | Sottotuta CRG tecnico manica corta | CRG technical undersuit short sleeves |
| 1 | AAP.3065 L/XL | Sottotuta CRG tecnico manica corta | CRG technical undersuit short sleeves |
| 2 | AAP.3080 S/M | Sottotuta CRG tecnico manica lunga | CRG technical undersuit long sleeves |
| 2 | AAP.3080 L/XL | Sottotuta CRG tecnico manica lunga | CRG technical undersuit long sleeves |
| 3 | AAP.3085 S/M | Pantalone tecnico CRG | CRG technical undersuit trousers |
| 3 | AAP.3085 L/XL | Pantalone tecnico CRG | CRG technical undersuit trousers |
| 4 | AAP.3090 XS | Calze CRG tecniche (35/38) | CRG technical socks (35/38) |
| 4 | AAP.3090 S/M | Calze CRG tecniche (39/42) | CRG technical socks (39/42) |
| 4 | AAP.3090 L/XL | Calze CRG tecniche (43/46) | CRG technical socks (43/46) |

NOME

COGNOME

ETÀ

NAZIONE

GENERE M F

sparco®

# TABELLA MISURE

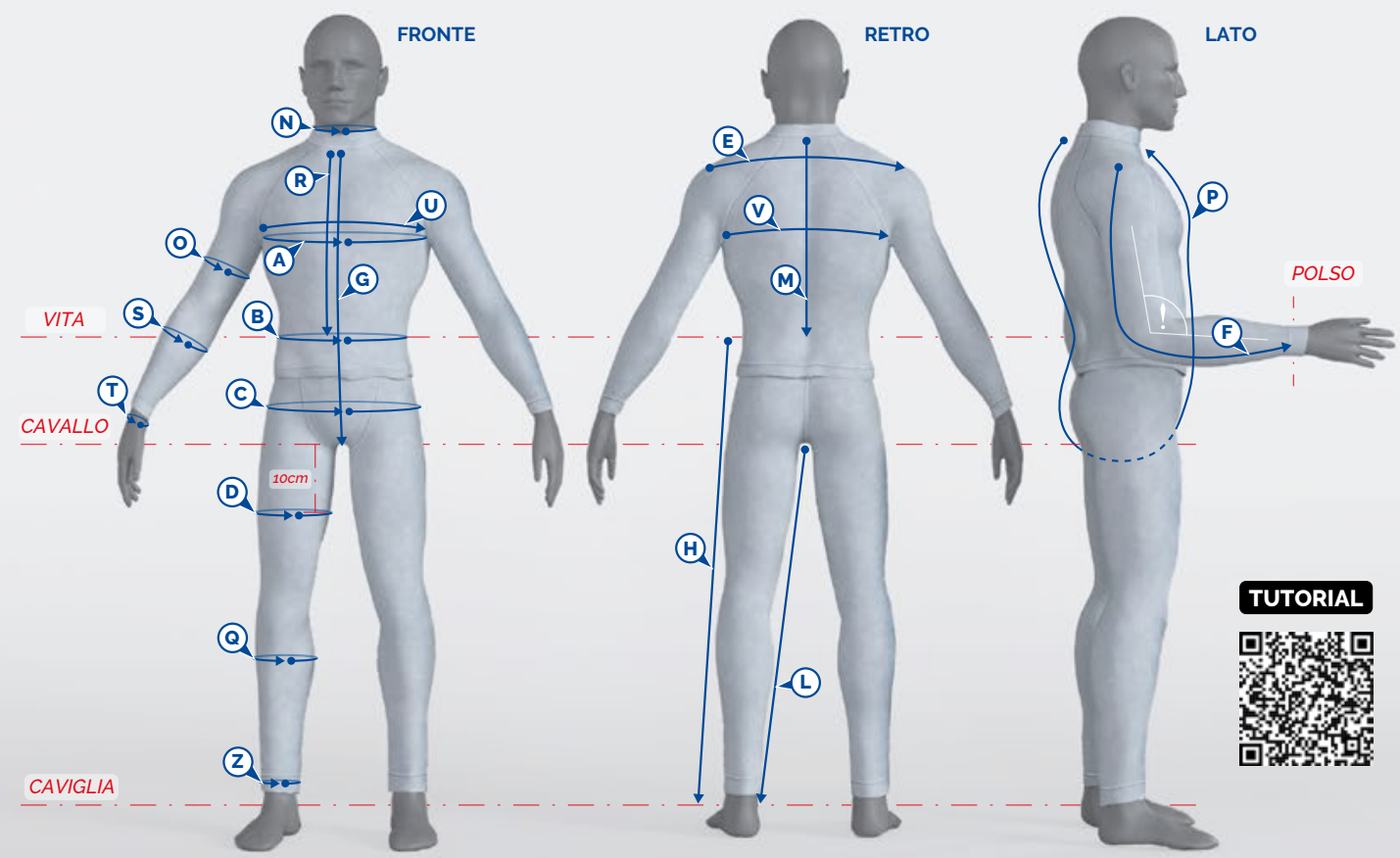


TUTORIAL

## SOLO PER TUTE KART

UTILIZZA UN CORPETTO PARACOSTOLE? SÌ NO

INDICARE CIRCONFERENZA TORACE COMPRENSIVA DI PARACOSTOLE cm

## MISURE GENERALI

ALTEZZA cm

PESO kg

## VESTIBILITÁ

SLIM FIT

REGULAR FIT

LOOSE FIT

## ISTRUZIONI

LEGGERE ATTENTAMENTE TUTTE LE ISTRUZIONI PRIMA DI PROCEDERE PER GARANTIRE MISURE ACCURATE:

- Prendere le misure indossando **solo l'underwear**. Si prega di rimuovere le scarpe.
- Misurare **due volte** per garantire la massima precisione.
- Per la misurazione di Ⓑ Ⓜ Ⓡ, **avvolgere una corda/elastico intorno alla vita** passando sull'**ombelico**, parallelamente al pavimento, per trovare meglio il punto di misurazione della vita anteriore e posteriore.
- Prendere tutte le misure in **centimetri (cm)**.
- Scrivere tutte le misure **leggibili** indicate sul modello sopra..

## MEASUREMENTS

**A CIRCONFERENZA TORACE** cm

Far passare il metro sotto l'ascella, nella parte più ampia del petto orizzontalmente, braccia rilassate lungo i fianchi.

**B CIRCONFERENZA VITA** cm

Far passare il metro attorno la vita orizzontalmente, braccia lungo i fianchi.

**C CIRCONFERENZA BACINO** cm

Far passare il metro intorno ai fianchi nel punto più largo, braccia lungo i fianchi. (18-20 cm sotto la vita).

**D CIRCONFERENZA COSCIA** cm

Misurare la parte più ampia della coscia. Il metro dovrebbe essere a circa 10 cm da sotto il cavallo.

**E LARGHEZZA SPALLE** cm

Braccia lungo i fianchi, fate passare il metro da un osso della spalla all'altro.

**F LUNGHEZZA MANICA** cm

Iniziare la misurazione dall'osso della spalla, passando sul gomito (braccio flesso) e terminando al polso

**G LUNGHEZZA TORSO FRONTALE** cm

Prendete la misura partendo dall'incavo del collo fino a sotto l'inguine.

**H LUNGHEZZA ESTERNO GAMBA** cm

Far scorrere il metro dalla vita fino alla caviglia

**L LUNGHEZZA INTERNO GAMBA** cm

Far scorrere il metro all'interno dal cavallo alla caviglia.

**M LUNGHEZZA SCHIENA** cm

Far partire il metro dalla base posteriore del collo fino all'altezza della vita.

**N CIRCONFERENZA COLLO** cm

Far passare il metro intorno al collo nel punto più ampio.

**O CIRCONFERENZA BICIPITE** cm

Far passare il metro intorno al bicipite nel punto più ampio.

**P LUNGHEZZA TOTALE TORSO** cm

Partendo dall'incavo del collo, far passare il nastro attraverso il cavallo fino alla base posteriore del collo.

**Q CIRCONFERENZA POLPACCIO** cm

Far passare il metro intorno al punto più ampio del polpaccio.

**R LUNGHEZZA TORSO-VITA** cm

Partire a misurare dall'incavo del collo fino alla vita.

**S CIRCONFERENZA AVAMBRACCIO** cm

Far passare il metro nel punto più ampio dell'avambraccio.

**T CIRCONFERENZA POLSO** cm

Far passare il metro attorno l'osso del polso.

**U LARGHEZZA TORACE** cm

Braccia lungo i fianchi, far passare il metro da un'ascella all'altra.

**V LARGHEZZA SCHIENA** cm

Braccia lungo i fianchi, far passare il metro da un'ascella all'altra.

**Z CIRCONFERENZA CAVIGLIA** cm

Far passare il metro attorno l'osso della caviglia.

*Consigliamo di inviare le foto della propria figura intera nelle posizioni indicate nello schema sopra per capire meglio la distribuzione delle misure.*

NAME

SURNAME

AGE

FLAG

GENDER M F

sparco®

# CUSTOM SIZE CHART

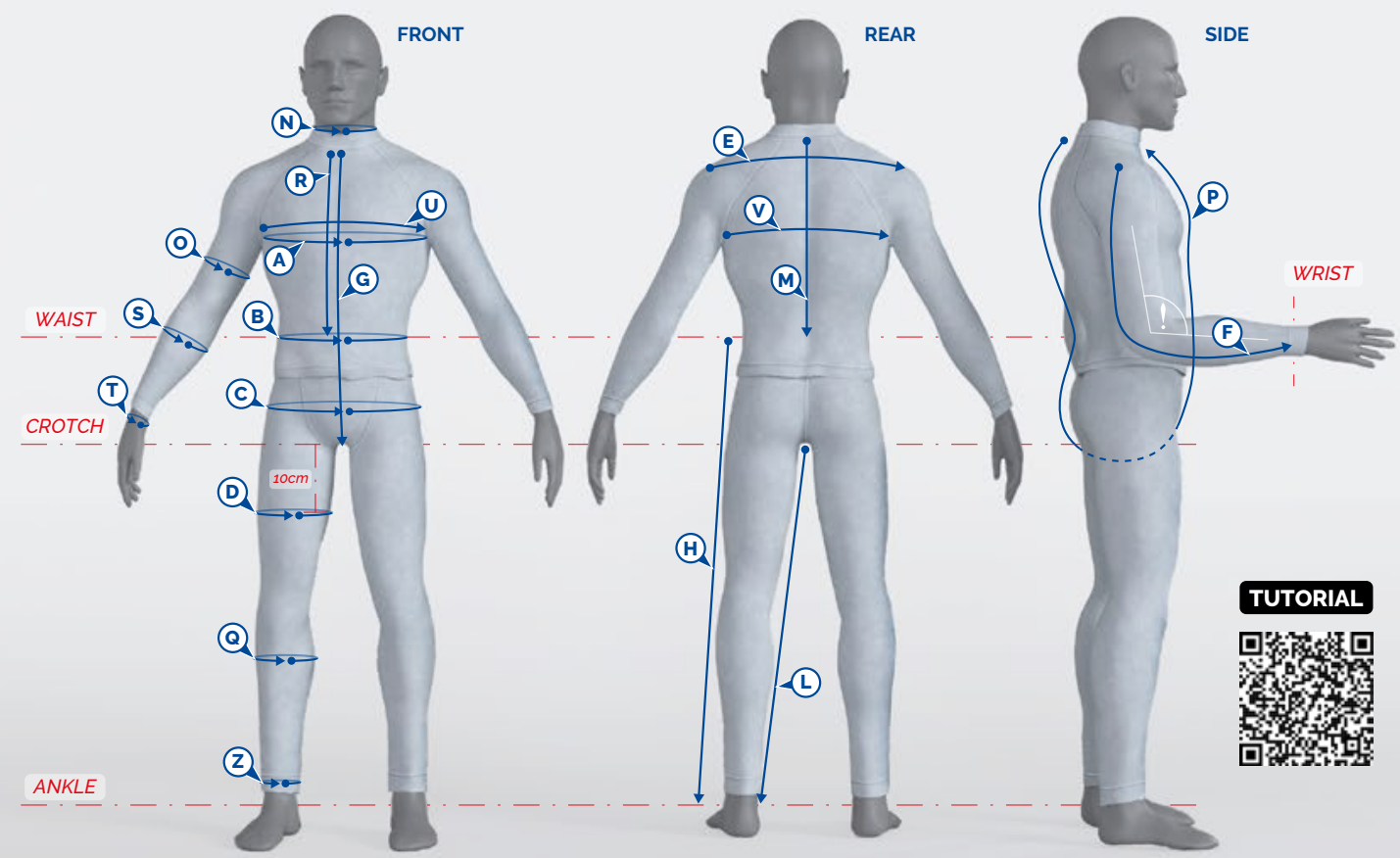


## FOR KARTING SUITS ONLY

DO YOU USE THE RIB PROTECTOR? YES NO

CHEST CIRCUMFERENCE WITH RIB PROTECTOR cm

## GENERAL MEASURES

HEIGHT cm

WEIGHT kg

## REQUESTED FIT

SLIM FIT

REGULAR FIT

LOOSE FIT

## RECOMMENDATIONS

READ ALL INSTRUCTIONS CAREFULLY BEFORE PROCEEDING TO ENSURE ACCURATE MEASUREMENTS:

- Take measurements wearing **only underwear**. Please remove shoes.
- Measure **twice** to ensure accuracy.
- For B, M, R, measurement **wrap a piece of elastic/rope** around your **waist** on **belly button**, parallel to floor, as a reference to better find frontal and back waist measurement point.
- Take all measurements in **centimeters (cm)**.
- Write all measurements **readable** in the above template.

## MEASUREMENTS

**A CHEST CIRCUMFERENCE** cm

Run tape measure under armpit, put in the largest part of the chest in horizontal position, arms relaxed at your sides.

**B WAIST CIRCUMFERENCE** cm

Run tape measure around waist horizontally, arms at your sides.

**C HIPS CIRCUMFERENCE** cm

Run tape measure around hips at the widest point, arms at your sides. (18-20 cm under waist point.)

**D THIGH CIRCUMFERENCE** cm

Measure the largest part of the thigh. Tape should be around 10 cm from below the crotch.

**E SHOULDER WIDTH** cm

Arms at your sides, run tape measure from bone to bone.

**F SLEEVE LENGTH** cm

Start the measurement from shoulder bone, running around elbow (arm flexed) ending at wrist.

**G FRONTAL CHEST LENGTH** cm

Take the measure starting from the notch of the neck down to below the crotch.

**H EXTERNAL LEG** cm

Run tape from waist to ankle bone

**L INTERNAL LEG** cm

Run tape from crotch to internal ankle bone.

**M BASE OF NECK TO WAIST** cm

Run the tape measure from lower vertebra of the neck to the waist.

**N NECK CIRCUMFERENCE** cm

Run your tape measure around the neck at the thickest point

**O BICEP CIRCUMFERENCE** cm

Run the tape measure around the widest point of the biceps.

**P TORSO LENGTH** cm

Starting from the notch of the neck in front, run tape through crotch to base of neck in back.

**Q CALF CIRCUMFERENCE** cm

Run tape measure around the widest point of the calf.

**R NECK TO WAIST (FRONT)** cm

Run tape measure from notch of the neck in front to waist strap.

**S FOREARM CIRCUMFERENCE** cm

Run the tape measure around the widest point of the forearm.

**T WRIST CIRCUMFERENCE** cm

Run the tape measure around the wrist bone.

**U CHEST WIDHT** cm

Arms at your sides, run tape measure from armpit to armpit.

**V BACK WIDTH** cm

Arms at your sides, run tape measure from armpit to armpit.

**Z ANKLE CIRCUMFERENCE** cm

Run the tape measure around the ankle bone.

*We recommend sending photos of your full figure in the positions shown above to better understand the distribution of your measurements.*

# GUIDE LINE

## Guida all'uso del logo CRG

Logo Istituzionale - Institutional Logo

### Colori Logo CRG
*CRG logo colors*

| CMKY | PANTONE |
|---|---|
| 100% Yellow | Yellow C |
| 100% Yellow<br>100% Magenta | Red 032 C |

## Colori fondo utilizzabili e non
*Background color usable and not usable*

Logo CRG su fondo nero - Black 100% - Ombra CRG bianca
*CRG logo on black background – black 100% - white CRG shadow*

Logo CRG su fondo grigio - Black 60%
*CRG logo on grey background*

Logo CRG bianco su fondo nero - Senza ombra
*white CRG logo on black background - without shadow*

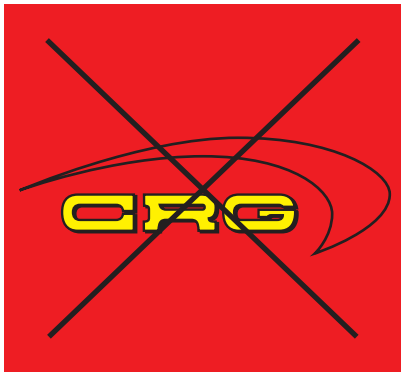


Colori fondo NON utilizzabili - Background color NOT usable

DIMENSIONI MINIME CONSENTITE

*MINIMUM SIZE ALLOWED*

25 MM

DIMENSIONE MINIMA CONSENTITA 25 MM

*MINIMUM SIZE ALLOWED 25MM*

.....

IL LOGO DEVE ESSERE RIDIMENSIONATO IN MODO PROPORZIONATO

*THE LOGO NEEDS TO BE RE-SIZED PROPORTIONALLY*

RIDIMENSIONAMENTO NON CONSENTITO

*RE-SIZING NOT ALLOWED*

.....

RIDIMENSIONAMENTO CONSENTITO

*RE-SIZING ALLOWED*

## Colori Logo CRG abbigliamento Stampa
*CRG logo color printed clothing*

CMKY

86% Magenta
80% Yellow

40% Black

PANTONE

Non esiste un riferimento pantone
*Doesn't exist a pantone reference*

877 C

## Colori Logo CRG abbigliamento Ricamo
*CRG logo color embroided clothing*

FILO RICAMO
EMBROIDERY THREAD

1837 polyneon madeira

FILO RICAMO
*EMBROIDERY THREAD*

Silver 11 fs madeira
Grigio 1011 madeira

## Colori Logo CRG casco
*CRG helmet logo colors*

RAL 1411

## COLORI LOGO CRG ABBIGLIAMENTO STAMPA
*CRG LOGO COLOR PRINTED CLOTHING*

CMKY

86% MAGENTA
80% YELLOW

100% BLACK

FILO RICAMO - *EMBROIDERY THREAD*

1837 POLYNEON MADEIRA

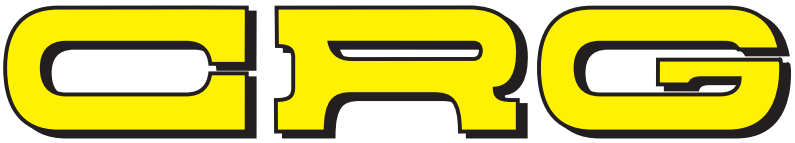

## COLORI LOGO CRG
*CRG LOGO COLORS*

CMKY

100% YELLOW

PANTONE

YELLOW C

COLORI FONDO NON UTILIZZABILI
*BACKGROUND COLOR NOT USABLE*

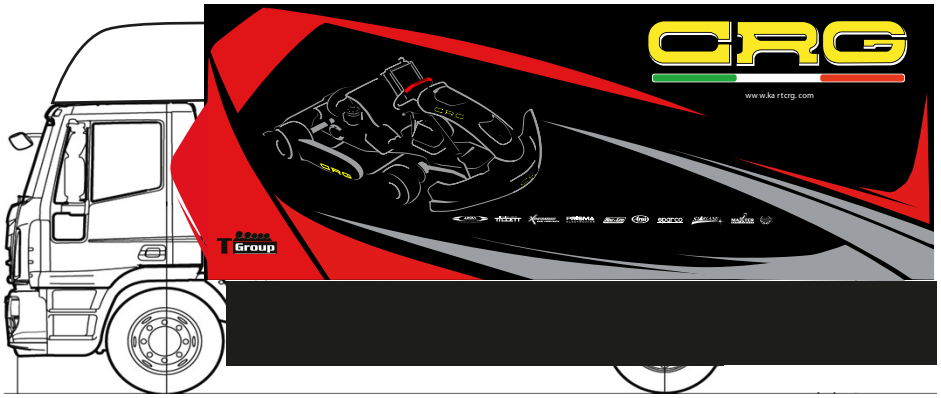

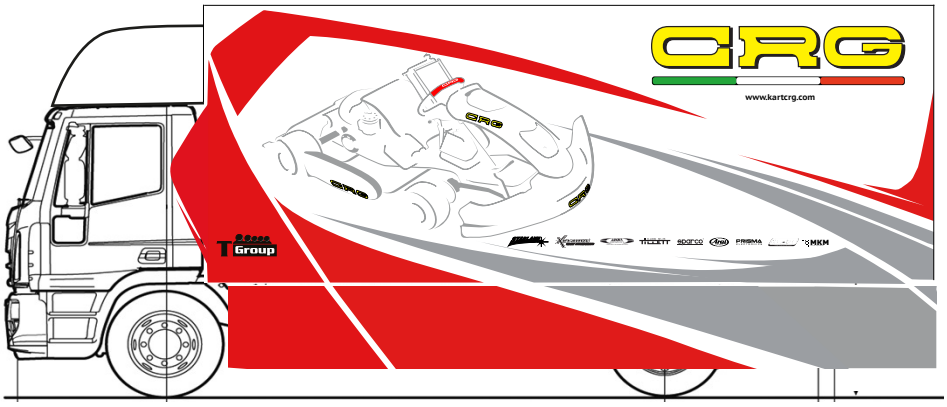

## COLORE VEICOLO CRG
## CRG *LOGO VEHICLE*

### COLORI ORACAL

021 YELLOW UNIVERSAL

090 SILVER GREY UNIVERSAL

O38 RED ORANGE FLUORESCENT

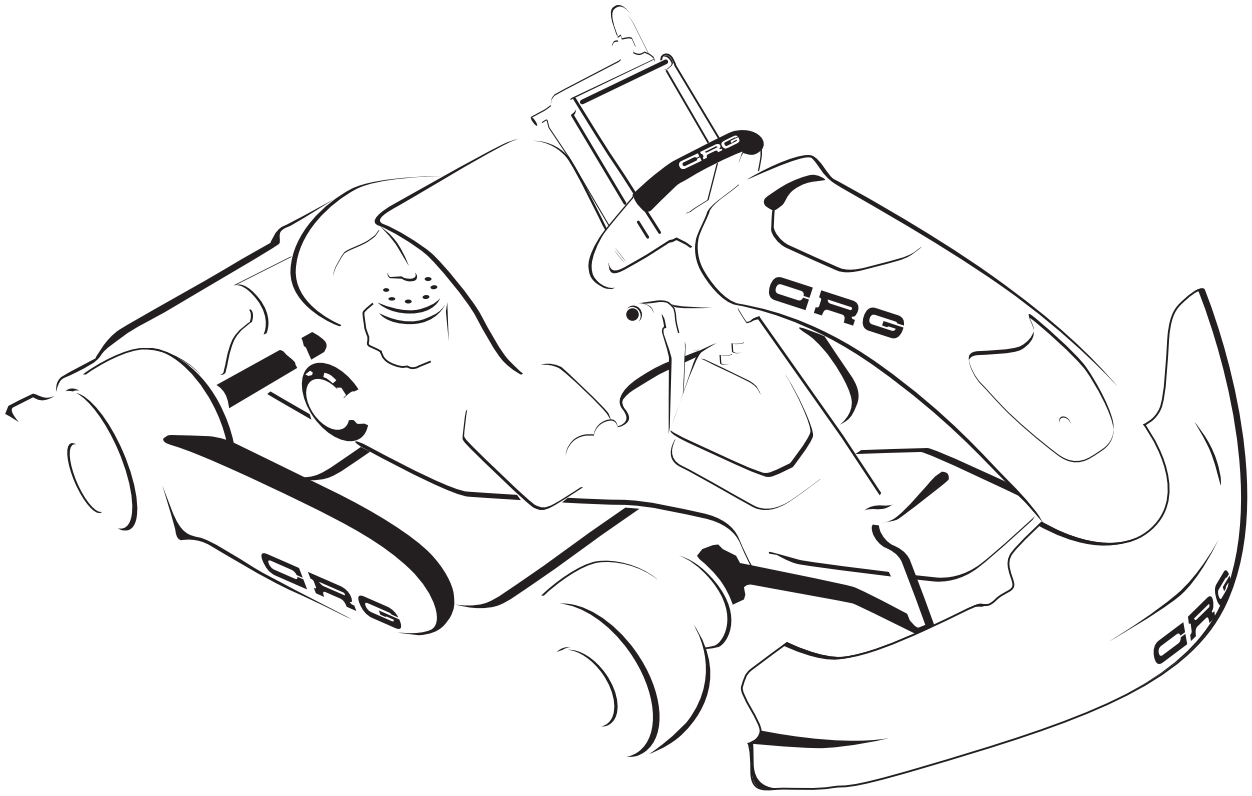


CRG Srl Via Mantova 4/F - 25017 Lonato del Garda (BS)
Tel. +39 030 9912604 - crg@kartcrg.com